Long-Term Follow-Up Results of Day Surgery for Lumbar Disc Herniation Using Percutaneous Endoscopic Lumbar Discectomy: A Single-Center Experience of 267 Cases.

Zhaojun Song
Suining Central Hospital
Maobo Ran
Suining Central Hospital
Juan Luo
Suining Central Hospital
Kai Zhang
Suining Central Hospital
Yongjie Ye
Suining Central Hospital
Jiazhuang Zheng
Suining Central Hospital
Zhi Zhang (zhangzhispine@163.net)
Suining Central Hospital

Research Article

Keywords: Day surgery, lumbar disc herniation, percutaneous endoscopic lumbar discectomy, microendoscopic discectomy, disc height, instability

Posted Date: November 30th, 2020

DOI: https://doi.org/10.21203/rs.3.rs-109537/v1

Version of Record: A version of this preprint was published on February 9th, 2021. See the published version at https://doi.org/10.1186/s12891-021-04038-6.

Title page

Manuscript type: Research article

Title: Long-term follow-up results of day surgery for lumbar disc herniation using percutaneous endoscopic lumbar discectomy：a single-center experience of 267 cases.

Study Design: Single-center retrospective observational study.

Setting: Day Surgery Unit, Spine Surgery Department of Suining Central Hospital.

Author names and affiliations:

Zhaojun Song*, Spine Surgery Department of Suining Central Hospital, Sichuan, People's Republic of China. E-mail: songzhaojunluojuan@163.com.

Maobo Ran*, Spine Surgery Department of Suining Central Hospital, Sichuan, People's Republic of China. E-mail: 107089360@qq.com.

Juan Luo*, Medical Record Department of Suining Central Hospital, Sichuan, People's Republic of China. E-mail: 407194402@qq.com.

Kai Zhang, Day Surgery Unit of Suining Central Hospital, Sichuan, People's Republic of China. E-mail: 83913618@qq.com.

Yongjie Ye, Spine Surgery Department of Suining Central Hospital, Sichuan, People's Republic of China. E-mail: yongjieguke@163.com.
Jiazhuang Zheng,Spine Surgery Department of Suining Central Hospital, Sichuan, People's Republic of China. E-mail: jiazhuangspine@163.com.
Zhi Zhang, Spine Surgery Department of Suining Central Hospital, Sichuan, People's Republic of China. Email: zhangzhispine@163.net.
* These authors contributed equally to this work.

Co-corresponding author:
Kai Zhang,

Tel: 18008258423.
E-mail: 83913618@qq.com.

Zhi Zhang,
Tel: 18008258229.
E-mail: zhangzhispine@163.net.

Long-term follow-up results of day surgery for lumbar disc herniation using percutaneous endoscopic lumbar discectomy： a single-center experience of 267 cases.

ABSTRACT

Background: Although numerous studies have shown good clinical results of percutaneous endoscopic lumbar discectomy (PELD) for hospitalized patients with lumbar disc herniation (LDH), there are few articles that report on the day surgery patients undergoing PELD.

Methods: Atotal of 267 patients with LDH received PELD during day surgery were followed up for at least 3 years. Relevant data and clinical outcomes were recorded and assessed. Meanwhile, we compared the clinical effects between patients treated by PELD during day surgery and microendoscopic discectomy (MED) for contemporaneous hospitalized patients with LDH (116 patients).

Results: Patients treated by PELD had lower blood loss (10.8 ± 4.1 mL, 71.3 ± 23.3 mL,respectively; $P < 0.001$) and shorter hospital stay (22.7 ± 4.2 hours, 48.1 ± 22.6 hours, respectively; $P < 0.001$) compared with patients treated by MED. The visual analogue scale (VAS) for leg and back pain（VAS-L and VAS-B, respectively) and Oswestry disability index (ODI) decreased significantly after PELD than those before the operation at 3 years postoperative, and the postoperative VAS-B in PELD group was significantly decreased from the MED group ($P = 0.001$). The complications rate was 9.4% (25/267) in the PELD group and 12.1% (14/116) in the MED group, without significant difference ($P = 0.471$). The 1-year postoperative recurrence rate in PELD group (5.2%, 14/267) was much higher than that in MED group (0.9%, 1/116) ($P = 0.042$). The postoperative lumbar lordosis（LL）(34.0 ±10.3), and sacral slope（SS) (27.5 ± 5.6) in PELD group improved significantly compared with the values in MED group (26.9 ± 9.8, 23.6 ± 6.8, respectively; all $P < 0.001$). The disc-height ratio at 3-year follow-up was (85.7 ± 6.4) % of the preoperative disc height in PELD group while (81.9 ± 7.0) % in MED group， with significant height loss in MED group ($P = 0.014$).

Conclusions: Day surgery for LDH undergoing PELD has favorable long-term outcomes.

Key words: Day surgery, lumbar disc herniation, percutaneous endoscopic lumbar discectomy, microendoscopic discectomy, disc height, instability

Introduction

Since the 1980s, Kambin began to use endoscopy or arthroscopy for lumbar disc herniation (LDH) With their efforts and the improvement of the spinal endoscopic surgery equipment, percutaneous discectomy has developed rapidly (1, 2). In 1997, Yeung proposed the Yeung endoscopic spine system, which features an endoscope with a 2.8 mm operating channel. Endoscopes and instruments are placed through a working sleeve, and the intervertebral disc is removed from the inside to the outside (3). Clinical studies have shown that Yeung endoscopic spine system has a satisfactory effect in the treatment of LDH (4). Hoogland et al. proposed the

transforaminal endoscopic surgical system (TESSYS system), which directly releases and decompress the nerve root through the operating channel into the spinal canal (5). With the improvement and development of percutaneous endoscopic lumbar discectomy (PELD) technology, PELD provides high-quality images and clear spine anatomical structure to help surgeons understand the pathological changes in patients with LDH. PELD has many advantages, such as mini-traumatic, less complications and better results while minimizing postoperative instability (6-8).

Although numerous previous studies have shown good clinical results of PELD for hospitalized patients with LDH, there are few articles that report on the day surgery patients undergoing PELD. Thus, details on the clinical outcomes of day surgery for LDH using PELD and its complications need to be thoroughly studied. To this aim, this study reports the postoperative clinical outcome of day surgery for LDH undergoing PELD.

Patients and methods

This study was approved by the Ethics Committee of the Suining Central Hospital and informed consent was obtained from all subjects. All methods were performed in accordance with relevant guide lines and regulations. 306 consecutive patients with L5-S1 LDH underwent PELD in the Day Surgery Unit of Suining Central Hospital using the SPINENDOS spinal full-endoscopic system (SPINENDOS, Munich, Germany) between March 2015 and March 2017.

The inclusion criteria were as follows: 1) diagnosis by computed tomography (CT) and magnetic resonance imaging (MRI) of lumbar vertebra disc; 2) neurological examination, including typical symptom of back pain and radicular pain and positive results from the femoral nerve stretch test or sciatic nerve stretch test; and 3) invalidation of conservative treatment for more than 6 weeks and indications of operation and the operative treatment being expected to be effective. The exclusion standards were as follows: 1) primary lumbar spinal stenosis, lumbar instability, lumbar spine trauma, lumbar spine tumour, infection or other pathologic conditions and 2) lumbar disc herniation accompanied with underlying diseases which cannot be candidates for operation.

We compared the clinical effects between patients treated by PELD in the Day Surgery Unit and contemporaneous hospitalized patients (116 cases) with LDH treated by microendoscopic discectomy (MED). The baseline information of the two groups were not different as shown in Table 1.

Table 1.Comparison of the baseline information of the two groups.

Groups	**PELD**	**MED**	**t/χ^2 test**	***P*-value**
Male/female	154 / 113	75 / 41	1.638	0.201
Age (years)	47.2±13.2	49.0±10.9	- 1.276	0.203
BMI	24.1±3.4	23.6±2.6	- 0.372	0.710
VAS-B	1.9±1.4	2.1±1.0	- 1.318	0.188
VAS-L	6.8±1.0	6.7±0.9	0.397	0.691

ODI (%)	63.5±10.2	62.5±7.3	1.039	0.300

PELD, percutaneous endoscopic lumbar discectomy; MED, microendoscopic discectomy; BMI, Body Mass Index; VAS-B, visual analogue scale for the back; VAS-L, visual analogue scale for the leg; ODI, oswestry dysfunction index.

Surgical Technique

Preoperative examinations, including blood routine test, blood biochemistry checking, blood electrolytes, coagulation convention, pretransfusion test, blood type, chest X-ray, electrocardiogram, A-P and lateral plain film of lumbar vertebra, excessive extend and flexion posture of lumbar vertebra, CT and MRI of lumbar vertebra, were applied to patients. PELD was performed under general anesthesia via interlaminar approach. All surgeries were performed by two experienced senior spine surgeons.

Patients were placed in the prone position. Puncture positioning was guided under the C-arm X-ray perspective machine using the interlaminar approach. 1) In the positive section of the C-arm film, a longitudinal line was drawn along the lumbar spinous process. Another longitudinal line was drawn along the inner edge of the facet that was parallel to the spinous process line. A horizontal line between the two vertebrae requiring operation was drawn. The point of intersection with the facet edge line is the puncturing point. 2) Interlaminar space was determined by the C-arm. The puncture point was approximately 5 mm away from the midline in the protrusion side of nucleus pulposus of intervertebral space. 3) A work channel was constructed by making a skin incision approximately 5 mm and extending the guide bar to the ligamentum flavum. 4) The remaining tissues in the work channel were cleaned, and the ligamentum flavum was exposed. The ligamentum flavum, partial vertebral laminae and fat were removed. The working sleeve was rotated into the spinal canal, separating and exposing the nerve root and nucleus pulposus. The herniated nucleus pulposus was removed, and radio frequency ablation was performed for annulus fibrosus and nucleus pulposus (Fig. 1). CT and MRI images of lumbar vertebra for the interlaminar approach to the PELD case are shown in Figure 2.

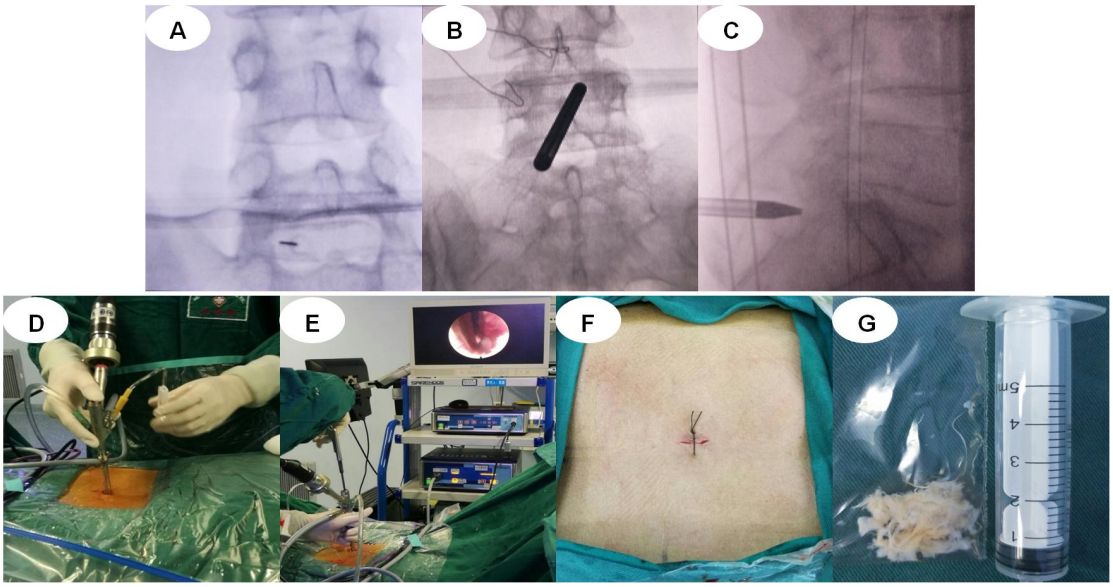

Figure 1. A typical PELD case via interlaminar approach. (A) puncture and radiography; (B) puncture and radiography; (C) puncture and radiography; (D) positioning of the tube; (E) the process of surgical operations; (F) the operative incisions; and (G) the herniated nucleus pulposus is removed. PELD, percutaneous endoscopic lumbar discectomy.

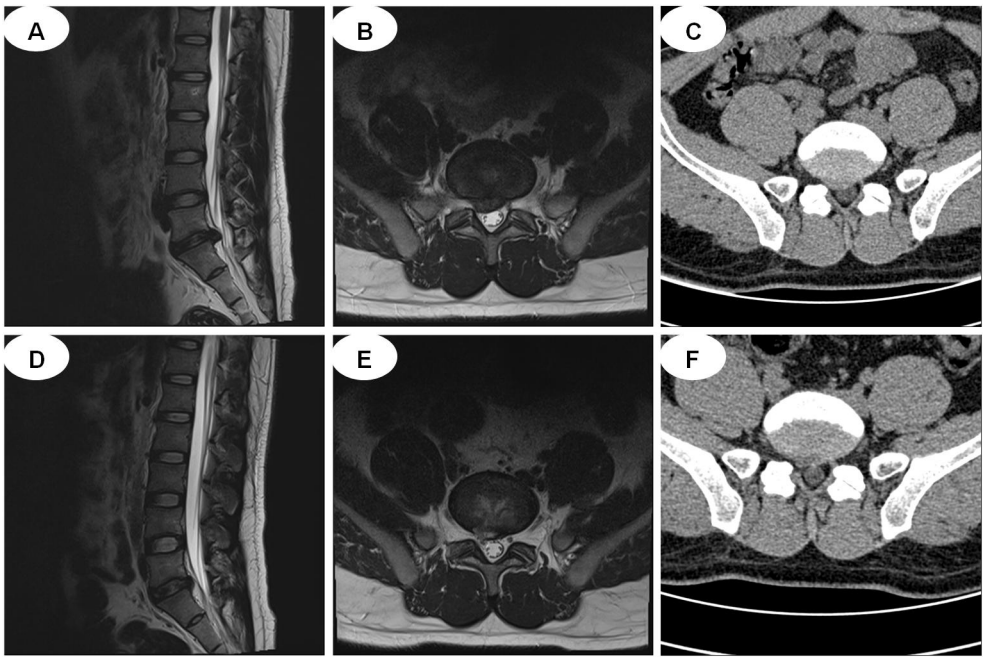

Figure 2. CT and MRI images. (A-C) MRI and CT show L5-S1 discal hernia before surgery; (D-F) MRI and CT show the herniated nucleus pulposus is removed after surgery. CT, computed tomography; MRI, magnetic resonance imaging.

Clinical evaluation

We compared the clinical effects between patients treated by PELD in the Day Surgery Unit and contemporaneous hospitalized patients (116 cases) with LDH treated by microendoscopic discectomy (MED). Operation time, operative blood loss, hospital stay, and postoperative complications were recorded and analysed. Clinical

follow-ups were taken each year after the operation by telephone, WeChat, and a post-surgery questionnaire .

All patients were clinically assessed with the VAS-B) and VAS-L, ranging from no pain (0 point) to worst pain imaginable (10 points). And patients were functionally assessed on the basis of the ODI. We compared the preoperative and long-term postoperative values. Standing lateral, flexion, and extension radiographs were taken on the patients' long-term follow-up visit. The Mochida method (Figure 3) was used to measure the disc-height ratio and disc instability (9). The disc-height ratio and lumbar parameters such as lumbar lordosis（LL）, sacral slope（SS) at the long-term follow-up visit were compared to the preoperative value. Based on Sang's study (10), intervertebral instability was defined as a greater than 10-degree change of the angle formed by the superior and inferior disc space of the index level between the flexion and extension radiographs (Figure 4).

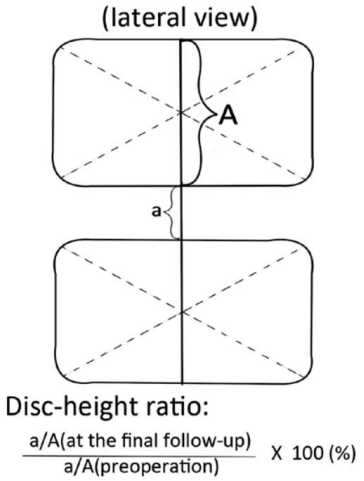

Figure 3. Mochida method for measuring the disc height ratio.

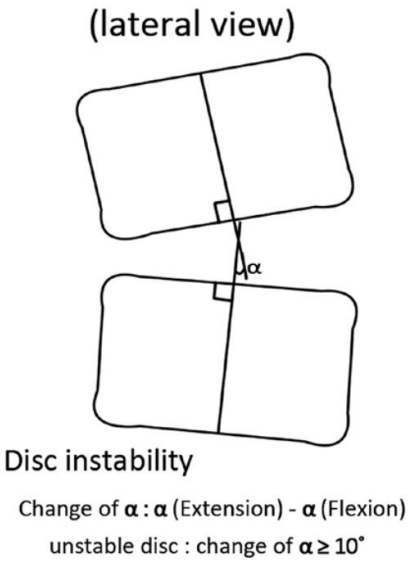

Figure 4. Method for checking for disc instability.

Statistical analysis

SPSS19.0 statistical software (IBM, Armonk, NY, USA) was used for the statistical analysis and measurement data was recorded as the mean ± standard deviation (SD). An independent t-test was used to analyse the individual groups, and a Chi-square test was used to analyse enumeration data. A *P* value of less than 0.05 was considered statistically significant .

Results

A total of 267 patients were followed up for at least 3 years after PELD, and 116 patients were followed up after MED. As shown in Table 2, mean blood loss was significantly shorter in PELD group (10.8 ± 4.1 mL) compared with MED group(71.3 ± 23.3 mL) ($P < 0.001$), mean hospital stay was significantly shorter in PELD group (22.7 ± 4.2 hours) compared with MED group (48.1 ± 22.6 hours) ($P < 0.001$), and there is no significant difference of operating time between PELD group (78.5 ± 2.6 minutes) and MED group (81.1 ± 3.3 minutes) ($P = 0.406$). The VAS-B (0.8 ± 0.4), VAS-L (0.6 ± 0.4) and ODI (12.9 ± 3.2) decreased significantly after PELD than those before the operation at 3 years postoperative, and the postoperative VAS-B in PELD group was significantly decreased from the MED group ($P = 0.001$).

The complications rate was 9.4% (25/267) in the PELD group and 12.1% (14/116) in the MED group, without significant difference ($P = 0.471$). Although there is no significant difference of overall postoperative recurrence rate between two groups, the 1-year postoperative recurrence rate in PELD group (5.2%, 14/267) was much higher than that in MED group (0.9%, 1/116) ($P = 0.042$).

Table 2. Summary of clinical outcomes of the two groups.

Observation variables	PELD	MED	P value
Blood loss (mL)	10.8±9.0	71.3±23.3	< 0.001
Operating time (min)	78.5±32.6	81.1±13.3	0.406
Hospital stay (hours)	22.7±4.2	48.1±22.7	< 0.001
VAS-B	0.8±0.4	1.1±0.7	0.001
VAS-L	0.6±0.4	0.8±0.6	0.224
ODI (%)	12.9±3.2	15.1±10.3	0.220
Complications rate (%)	9.4	12.1	0.471
Overall recurrence rate (%)	6.7	6.0	0.201
One-year recurrence rate (%)	5.2	0.9	0.042

PELD, percutaneous endoscopic lumbar discectomy; MED, microendoscopic discectomy; VAS-B, visual analogue scale for the back; VAS-L, visual analogue scale for the legs; ODI, Oswestry dysfunction index.

As shown in Table 3, the postoperative LL (34.0 ±10.3) and SS (27.5 ± 5.6) in PELD group improved significantly compared with the values in MED group (26.9 ±

9.8, 23.6 ± 6.8, respectively; all P < 0.001). The disc-height ratio at 3-year follow-up was (85.7 ± 6.4) % of the preoperative disc height in PELD group while (81.9 ± 7.0) % in MED group, with significant height loss in MED group ($P = 0.014$). There was no intervertebral instability in both groups after 3-year postoperative follow-ups.

Table 3. Comparison of radiological outcomes of the two groups.

Observation variables	PELD	MED	P value
Lumbar lordosis (°)	34.0 ±10.3	26.9 ± 9.8	< 0.001
Sacral slope (°)	27.5 ± 5.6	23.6 ± 6.8	< 0.001
Disc-height ratio(%)	85.7 ± 6.4	81.9 ± 7.0	0.014

PELD, percutaneous endoscopic lumbar discectomy; MED, microendoscopic discectomy.

Discussion

PELD has become a popular operative procedure for LDH. The clinical outcome has been reported for each operative approach (interlaminar, transforaminal, and posterolateral), and satisfactory results have already been reported (6, 11, 12). Although numerous previous studies have shown good clinical results of PELD for hospitalized patients with LDH, there are few articles reporting on the day surgery patients undergoing PELD.

In this study, we compared the clinical effects between 267 patients treated by PELD in the Day Surgery Unit and contemporaneous hospitalized 116 patients with LDH treated by MED, all cases were followed up for at least 3 years. The VAS-L, ODI and complications rate were no significant difference , which show that the two kinds of minimally invasive surgery are safe and effective. According to the Mochida method, the disc-height ratio at 3-year follow-up was 85.7 % of the preoperative disc height in PELD group while 81.9 % in MED group, which shows that minimally invasive surgery could not avoid disc degeneration and height loss. It is consistent with what reported by Sang et al and Wang et al.(10, 13). Lumbar instability is a common complication after open discectomy and the incidence is as high as 22%, which could lead to chronic low back pain (10). In our study, although there was no intervertebral instability in both groups after 3-year postoperative follow-ups, the postoperative lumbar lordosis and sacral slope in PELD group improved significantly compared with the values in MED group. In particular, although the VAS-B was very low at 3 years postoperative, the VAS-B was higher significantly in MED group than that in PELD group. The reasons which cause these results maybe as follows: the paravertebral muscles were stripped, partial vertebral lamina and ligamentum flavum，and most of the nucleus pulposus were removed in MED operation with a large working channel.

According to reports in the literature, revision rates for PELD range from 0.8% to 9.6% (10, 14, 15), and revision rates for MED range from 3.5% to 10.8% (16). By the 3 years follow-up, our study identified the revision rate of 6.7% in patients who initially underwent PELD during day surgery. In particular, the 1-year postoperative recurrence rate in PELD group was 5.2%, which was much higher than that in MED

group (0.9%) . It has been reported that the early recurrence (≤ 6 months) rates have been shown to be more than 50% in PELD (17). Surgically unappreciated disc fragment and incomplete decompression may lead to a higher early recurrence (14). Kim's study showed that total and late recurrence after PEID is associated with advanced age, and the annular sealing technique, excellent annular sealing technique during PEID can reduce the early recurrence of disc herniation (4). To reduce recurrence rates, complete removal of herniated mass is required including the basal and extruded parts (18).

Conclusions

Although the 1-year postoperative recurrence rate was 5.2%, day surgery for LDH undergoing PELD has several advantages such as less operative blood loss, shorter hospital stay, more efficacy for back pain, and more effective to maintain lumbar physiological curvature compared to MED in the long-term follow-up. Therefore, PELD should be considered as a valuable day surgery for the treatment of lumbar disc herniation.

Abbreviations

BMI, Body Mass Index; LDH, lumbar disc herniation; LL, lumbar lordosis; MED, microendoscopic discectomy; ODI, oswestry dysfunction index; PELD, percutaneous endoscopic lumbar discectomy; SS,sacral slope; VAS, visual analogue scale; VAS-B, visual analogue scale for the back; VAS-L, visual analogue scale for the legs.

Declarations

Ethics approval and consent to participate

This study was approved by the Ethics Committee of the Suining Central Hospital.

Consent for publication

Not applicable.

Availability of data and materials

The data and materials in current paper may be made available upon request through sending e-mail to first author.

Competing interests

The authors declare that they have no competing interests.

Funding

Not applicable.

Authors' contributions

Zhi Zhang and Kai Zhang designed the study. Zhaojun Song, Maobo Ran, Juan Luo collected and analyzed the data, wrote the initial draft, and performed statistical analyses. Yongjie Ye and Jiazhuang Zheng participated in revising the manuscript. All authors read and approved the final manuscript.

Acknowledgements

The authors are grateful to Ms. Jin Luo for her aid with patient care. The authors also acknowledge the rehabilitation department for rehabilitation service to the patients.

References

1. Kambin P.Arthroscopic microdiskectomy.Mt Sinai J Med 1991; 58:159-164.
2. Schreiber A, Leu H. Percutaneous nucleotomy:technique with discoscopy. Orthopedics 1991; 14:439-444.
3. Yeung AT. The evolution of percutaneous spinal endoscopy and discectomy: state of the art. Mt Sinai J Med 2000; 67:327-332.
4. Kim HS, Park JY. Comparative assessment of different percutaneous endoscopic interlaminar lumbar discectomy (PEID) techniques. Pain Physician 2013; 16:359-367.
5. Hoogland T, Schubert M, Miklitz B, Ramirez A. Transforaminal posterolateral endoscopic discectomy with or without the combination of a low-dose chymopapain: a prospective randomized study in 280 consecutive cases. Spine (Phila Pa 1976) 2006; 31:E890-897.
6. KC Choi, JS Kim, CL Dong, CK Park. Percutaneous endoscopic lumbar discectomy: minimally invasive technique for multiple episodes of lumbar disc herniation. BMC Musculoskelet Disord 2017; 18:329-334.
7. Ruetten S, Komp M, Merk H, Godolias G. Full-endoscopic interlaminar and transforaminal lumbar discectomy versus conventional microsurgical technique: a prospective, randomized, controlled study. Spine (Phila Pa 1976) 2008; 33: 931-939.
8. Eun SS, Lee SH, Sabal LA. Long-term follow-up results of percutaneous endoscopic lumbar discectomy. Pain Phys 2016; 19:E1161-1166.
9. Mochida J, Nishimura K, Nomura T. Appropriate procedures of posterior herniotomy and percutaneous nucleotomy in lumbar disc herniation. Rinsho Seikei Gaka 1994; 29:423- 430.
10. Sang SE, Sang HL, Luigi AS. Long-term follow-up results of percutaneous endoscopic lumbar discectomy. Pain Physician, 2016, 19:E1161-E1166.
11. HP Song, HF Sheng, WX Xu. A case-control study on the treatment of protrusion of lumbar intervertebral disc through PELD and MED. Exp Ther Med 2017; 14: 3708-3712.
12. Yang Zhang, Xin-Jian Yang, Teng-Hui Zeng, Yi-Yan Qiu, Yi-Tian Wang, Fei-Guo Liang. A retrospective study of epidural and intravenous steroids after

percutaneous endoscopic lumbar discectomy for large lumbar disc herniation. Chin J Traumatol 2017; 20:34-38.

13. M Wang, Y Zhou, J Wang, Z Zhang, C Li. A 10-year follow-up study on longterm clinic outcomes of lumbar microendoscopic discectomy. J NeurolSurg A, 2012, 73(4): 195-198.
14. Kyung-Chul Choi, June-Ho Lee, Jin-Sung Kim, Luigi Andrew Sabal, Sol Lee, Ho Kim, Sang-Ho Lee. Unsuccessful percutaneous endoscopic lumbar discectomy: a single center experience of 10, 228 cases. Neurosurgery, 2015, 76(4): 372-380.
15. Ruetten S, Komp M, Godolias G. An extreme lateral access for the surgery of lumbar disc herniations inside the spinal canal using the full-endoscopic uniportal transforaminal approach-technique and prospective results of 463 patients. Spine(Phila Pa 1976). 2005;30(22):2570-2578.)
16. Hou TY, Zhou Q Dai F. Repeated microendoscopic discectomy for recurrent lumbar disk herniation. Clinics, 2015, 70 (2): 120-125.
17. Cheng J, Wang H, Zheng W, et al. Reoperation after lumbar disc surgery in two hundred and seven patients. Int Orthop. 2013;37(8):1511-1517.
18. Ahn Y. Transforaminal percutaneous endoscopic lumbar discectomy: technical tips to prevent complications. Expert Rev Med Devices. 2012;9(4):361-366.）

Figures

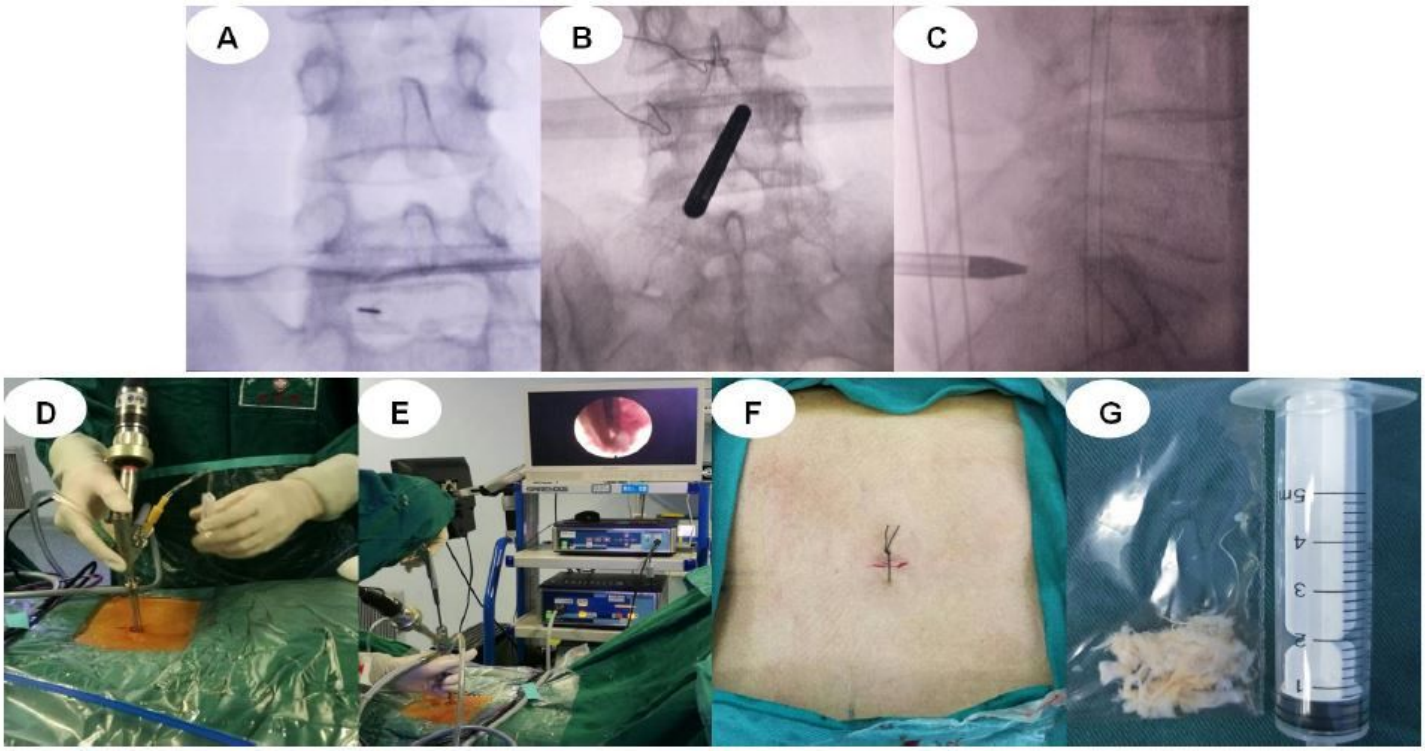

Figure 1

A typical PELD case via interlaminar approach. (A) puncture and radiography; (B) puncture and radiography; (C) puncture and radiography; (D) positioning of the tube; (E) the process of surgical operations; (F) the operative incisions; and (G) the herniated nucleus pulposus is removed. PELD, percutaneous endoscopic lumbar discectomy.

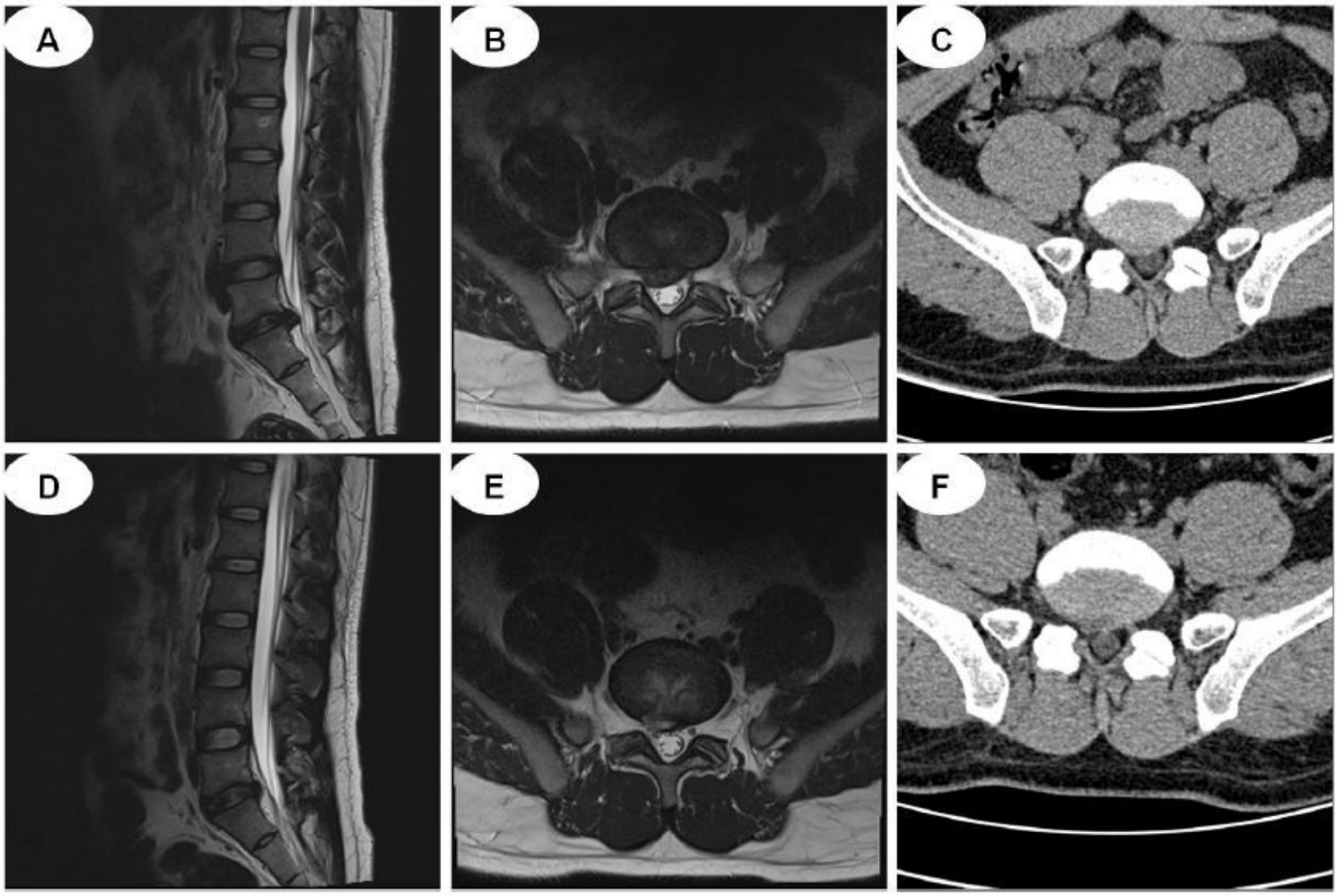

Figure 2

CT and MRI images. (A-C) MRI and CT show L5-S1 discal hernia before surgery; (D-F) MRI and CT show the herniated nucleus pulposus is removed after surgery. CT, computed tomography; MRI, magnetic resonance imaging.

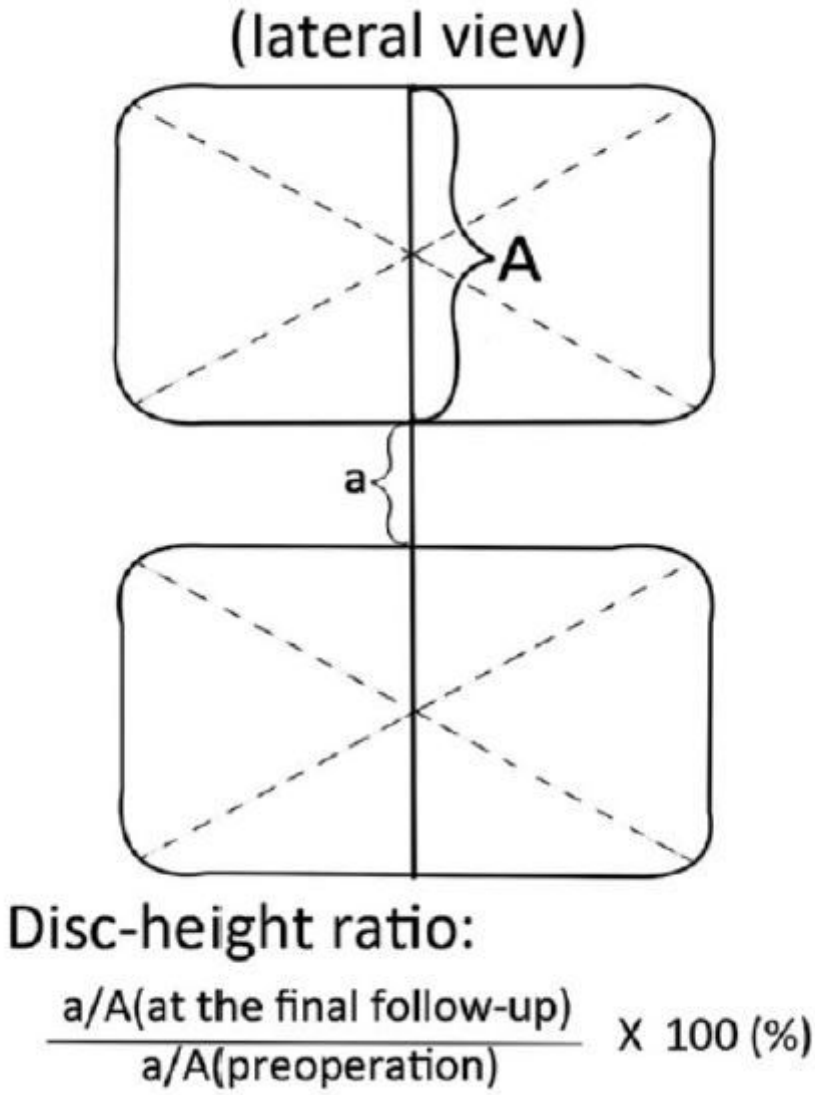

Figure 3

Mochida method for measuring the disc height ratio.

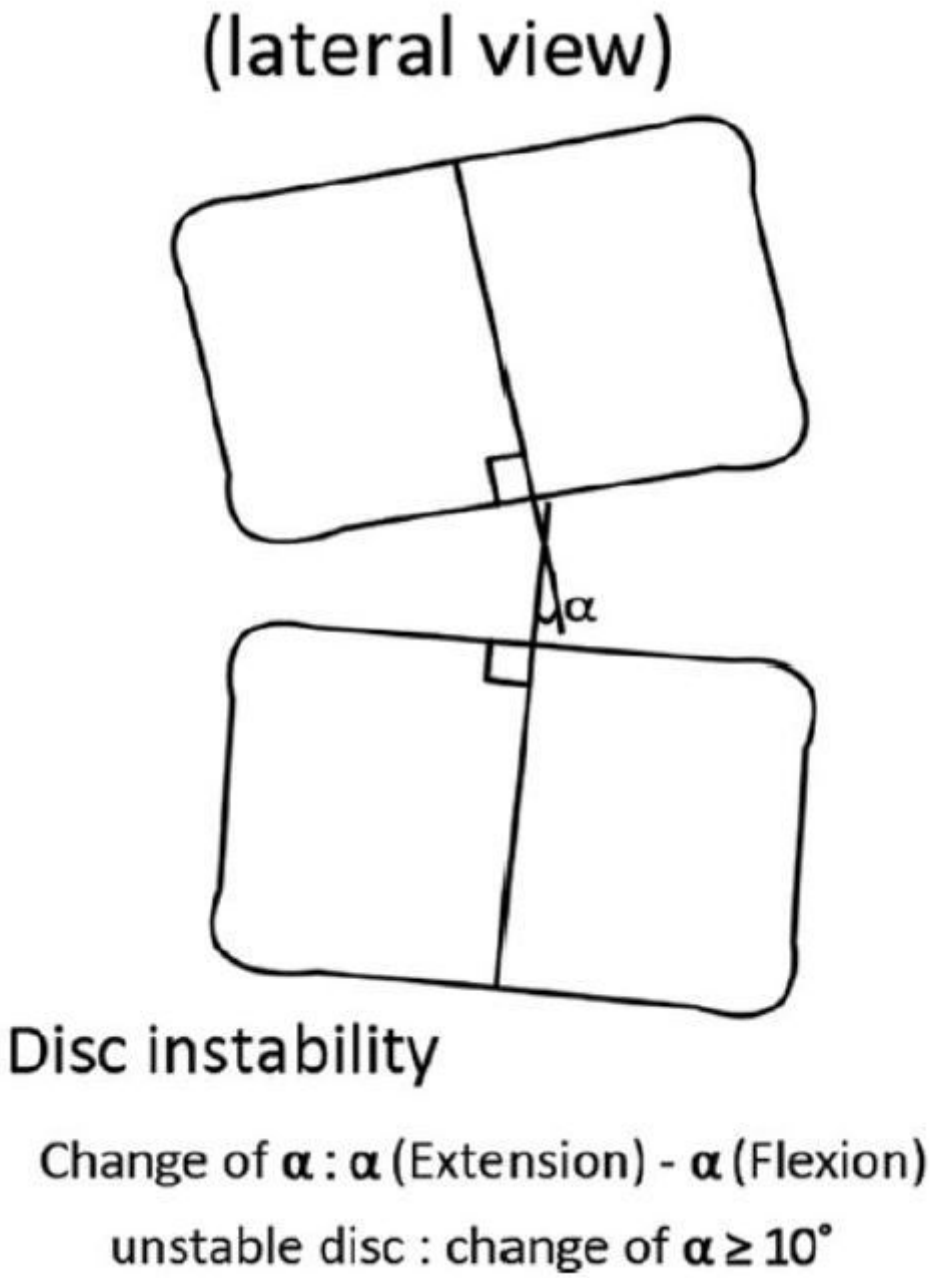

Figure 4

Method for checking for disc instability.