# Development and Application of a New Type of Medical Protective Sputum Suction Respiratory Circuit

**weizhou Wu**
Department of Neurology, the 985th Hospital of the Joint Logistics Support Force, Taiyuan 030001, Shanxi, China

**Kang Lu**
Cadre Ward department, the 985th Hospital of the Joint Logistics Support Force, Taiyuan 030001, Shanxi, China

**Gaomei Jin**
Department of Neurology, the 985th Hospital of the Joint Logistics Support Force, Taiyuan 030001, Shanxi, China

**Haixia Yang**
Department of Neurology, the 985th Hospital of the Joint Logistics Support Force, Taiyuan 030001, Shanxi, China

**Lin Ren**
Hematology and Oncology department, the 985th Hospital of the Joint Logistics Support Force, Taiyuan 030001, Shanxi, China

**Baoshuan Guo**
Henan Di Yi Medical Technology Development Co.,Ltd, Henan 453400, China

**Qingfeng Xue** ( 55907614@qq.com )
Department of Anesthesiology, the 985th Hospital of the Joint Logistics Support Force, Taiyuan 030001, Shanxi, China

---

**Research Article**

**Keywords:** ventilator-associated pneumonia, breathing circuit, aspiration of sputum

**Posted Date:** January 3rd, 2022

**DOI:** https://doi.org/10.21203/rs.3.rs-1115588/v1



---

# Abstract

**Background:** At present, there are few breathing circuits that can protect health care workers. Here, we have developed a new disposable medical protective sputum suction breathing circuit.

**Methods:** The main components of the structure of the novel medical protective breathing circuit are adapter, isolation sleeve, stop sleeve, sealing cover and sealing ring. An isolation sleeve is inserted into the conversion joint. The isolation sleeve inner sleeve has a stop sleeve with an inverted round table structure. The upper nozzle of the adapter is provided with a sealing ring tightly combined with the lower outer edge of the isolation sleeve, and a sealing cover is provided on the sealing ring.

**Results:** The device is easy to operate and can prevent the pollution caused by sputum splashing when sucking sputum.

**Conclusion**: The medical protective sputum suction and breathing circuit is simple in structure, easy to use, and can effectively protect medical staff.


# Background

Respiratory circuit is a necessary equipment for mechanical ventilation of severe patients, which is used to connect the ventilator with the endotracheal tube of patients, and plays an irreplaceable role in providing oxygen, respiratory support and keeping the respiratory tract unobstructed[1]. In the process of respiratory support, the respiratory tract will produce a large number of secretions. In order to keep patients' respiratory tract unobstructed and maintain their ventilation function, endotracheal sputum suction is the key measure in respiratory tract management of patients with mechanical ventilation[2]. During sputum suction, patients often suffer from jet cough due to stimulation of airway mucosa, which causes sputum and condensed water containing pathogenic bacteria to splash out, pollutes medical staff, instruments and environment, and finally leads to the spread of ventilator-associated pneumonia (VAP). At present, the open sputum suction device used in clinic has no effective protective effect. Although the closed sputum suction tube has protective function, it is expensive and inconvenient to use, so it is only used for patients with severe infectious diseases. Therefore, in order to improve the efficiency of sputum suction nursing and reduce the secretion pollution caused by irritating cough, we developed a new type of medical protective sputum suction breathing loop tube, which is convenient for airway operation and nursing, and provides convenience for scientific and safe airway management.

# 1. The Structure Of Medical Protective Sputum Suction Respiratory Circuit

The main components of the structure of the novel medical protective breathing circuit (Fig. 1) are: adapter (2), isolation sleeve (3), stop sleeve (4), sealing cover (7) and sealing ring (9).

The adapter includes three nozzles: upper nozzle, lower nozzle and side nozzle. The lower orifice (1) of the adapter is connected with the tracheal intubation of the patient, and the side orifice (10) is connected with the artificial nose and the ventilator. An isolation sleeve (3) is inserted into the upper nozzle, and the bottom of the isolation sleeve is provided with cross-cross grooves (11) capable of penetrating sputum suction tubes, the grooves and grooves are respectively located on the edges (6), and the confluence of adjacent edges protrudes upward along the midline of the edges to form two pressure-bearing inclined planes (5) (Fig. 2A and 2B).

The isolation sleeve is inserted with a stop sleeve (Fig. 2C). The bottom of the stop sleeve has an inverted cone structure, A punching hole (12) capable of punching a sputum suction tube is arranged in the middle part of the inverted cone structure, The spacing between the inverted cone structure and the bottom of the isolation sleeve can prevent the rear edge and the pressure-bearing inclined plane of the sputum suction tube from turning inward into the isolation sleeve from bottom to top, and the upper outer edge lower end face formed by the outward extension of the top of the stop sleeve coincides with the lower outer edge upper end face of the isolation sleeve. The upper nozzle of the adapter is provided with a sealing ring (9) tightly combined with the lower outer edge of the isolation sleeve, and a sealing cover (7) is provided on the sealing ring (Fig. 1). Isolation sleeve, stop sleeve, sealing cover and sealing ring are all made of soft but plastic silica gel material (Fig. 3).

In figs. 1 and 2: 1-lower nozzle of adapter, 2-adapter, 3-isolation sleeve, 4-stop sleeve, 5-pressure bevel, 6-rib, 7-sealing cover, 8-plug body, 9-sealing ring, 10-side nozzle of adapter, 11-groove, 12-through hole.

## 2. Instructions For The Use Of New Breathing Circuit

The new medical protective respiratory circuit is suitable for patients with tracheotomy or critically ill patients with mechanical ventilation. When in use, the lower orifice of the adapter is connected with the tracheal intubation of the patient, and the side orifice is connected with the artificial nose and the ventilator. After starting the ventilator, the respiratory circuit is always in a positive pressure state. When clearing the secretion in the respiratory tract of the patient, the medical staff directly opens the sealing cover (7) without pulling out the adapter, and inserts the disposable sputum suction tube from the opening of the sealing ring (9). When inserted into the groove seam (11) of the isolation sleeve, the fork seam at the intersection point of the groove seam is separated and closely matched with the sputum suction tube. When the sputum suction tube passes through the groove slot (11) and the stop sleeve (4) to remove secretion, because the isolation sleeve (3) and the stop sleeve (4) exist between the sputum suction tube and the adapter, when the patient has irritating cough, the air pressure in the trachea can close the groove slot under the isolation sleeve. The greater the air pressure, the greater the pressure borne by the pressure-bearing inclined plane (5), and the tighter the closure of the groove slot (11). At this time, the patient's secretion will not splash out and pollute the medical staff and their surrounding environment. After the operation is completed, after the disposable sputum suction tube is pumped away, the groove seam (11) is restored to the initial closed state, and the sealing cover (7) is buckled to the

sealing ring (9), so that the internal environment of the trachea of the patient can be isolated from the external environment.

# 3. Discussion

VAP refers to pulmonary infectious inflammation after 48 hours of invasive mechanical ventilation, which is one of the most common nosocomial infectious diseases in patients with mechanical ventilation in intensive care unit (ICU) [3]. Relevant epidemiological studies show that the main pathogenic bacteria of VAP are Gram-negative bacilli, with serious mixed infection and serious drug resistance. The incidence rate is 4.5 cases/1000 mechanical ventilation days, and the mortality rate is as high as 45% in 28 days[4, 5]. How to effectively prevent VAP has become one of the most concerned issues in the field of critical care medicine. At present, the important measure to prevent VAP by non-pharmacological methods in clinic is to prevent cross infection, and endotracheal sputum aspiration is the main way to cause cross infection in patients with mechanical ventilation[6]. Therefore, the use of appropriate sputum suction device can effectively reduce the occurrence of VAP.

Patients with mechanical ventilation have more airway secretions due to long-term bed rest, decreased immune function, poor ciliary activity and hyperplasia of bronchial wall glands. Therefore, it is necessary to suck sputum regularly to remove secretions, keep respiratory tract unobstructed and prevent lung infection. According to whether it is necessary to disconnect the connection between the respiratory circuit tube and the patient's endotracheal intubation during sputum suction, the sputum suction methods are divided into open and closed[7]. Using traditional open sputum suction, It is easy to induce patients to have jet cough, and the sputum of patients and secretions containing a large number of pathogenic bacteria in respiratory circuit tubes will splash out, and the splashing speed may be as high as 300km/h, which will cause the environment several meters away around the air inlet and the surrounding operators and equipment to be polluted, resulting in cross-infection of patients and medical staff, and aggravating the spread of VAP. At the same time, open sputum aspiration needs to disconnect the respiratory circuit, which may lead to temporary interruption of ventilation and oxygen supply, and easily lead to sudden drop of airway pressure and reduction of lung volume, resulting in decrease of blood oxygen saturation[8]. Compared with open sputum suction, closed sputum suction device can effectively improve oxygen saturation, reduce clinical signs of hypoxemia, maintain positive end-expiratory pressure, reduce lung volume loss, and prevent environment, medical staff and pollution. Hamishekar found that the incidence of VAP in closed sputum aspiration was 12%, which was lower than that in open sputum aspiration (20%)[9]. With the clinical application of closed sputum suction device, its defects are also revealed. The sputum suction tube of the closed sputum suction system is a non-disposable item. After use, the sputum suction tube is not washed clean, and the sputum adheres to the inner and outer walls of the sputum suction tube, which leads to the propagation of pathogenic bacteria on the tube wall. Because it is difficult to replace, it falls off in the airway when sucking sputum again, resulting in secondary pollution of the airway. In addition, after many times of sputum suction by the closed sputum suction device, the soft catheter sheath will be twisted, which will shorten its length. The shortened catheter

sheath prevents the catheter from completely withdrawing from the trachea, thus increasing the airway resistance and leading to some ventilator-related complications[10]. Moreover, although the closed sputum suction device tends to reduce the occurrence of VAP, the cost is high, which greatly increases the economic burden of patients[11].

In order to overcome the defects of the above-mentioned sputum suction device, we have continuously explored it and developed a new type of medical protective breathing circuit tube, which can not only prevent sputum splashing, but also use disposable sputum suction tube, and has independent intellectual property rights (China National Invention Patent No. ZL 2019 1 0141806.5; China National Utility Model Patent No. ZL 2019 20241720.5). Compared with the common respiratory circuit, this new medical protective respiratory circuit has the following advantages: (1) It can effectively reduce cross-infection, avoid the exposure of patients' respiratory tract and effectively reduce the occurrence of VAP; (2) It can prevent sputum and secretion containing pathogenic bacteria from splashing, effectively protect medical staff and ICU environment, improve the safety of nursing work and reduce the nosocomial infection rate; (3) It is convenient for the operation examination of fiberoptic bronchoscope, and at the same time, it plays a very good protective role for the operator; (4) The price is cheap, which can reduce the medical expenses of patients and is convenient for clinical application.

To sum up, the medical protective respiratory circuit designed by us has simple structure, low cost and convenient use, which can not only effectively protect medical staff and ICU environment, but also control the cross infection of pathogenic bacteria and reduce the occurrence of VAP. Therefore, it has a good prospect of clinical application and popularization.

# Declarations

### Consent for publication.

We agree to the publication of this paper.

### Availability of data and materials

The datasets used during the current study are available from the corresponding author on reasonable request.

### Competing interests

The authors declare no competing interest.

### Authors' contributions

Drafting of the manuscript: Weizhou Wu, Kang Lu; Concept and design: Qingfeng Xue, Weizhou Wu, Gaomei Jin; Critical revision of the manuscript for important intellectual content: Haixia Yang, Lin Ren;

technical and material support: Haixia Yang, Baoshuan Guo. All authors read and approved the final manuscript.

**Acknowledgements**

This work was supported by Henan Di Yi Medical Technology Development Co.Ltd.

# References

1. Khan MS, Karnam HF, Verma M. Accidental spillage of breathing circuit condensate into airway leading to ventilator-associated pneumonia. J Crit Care. 30(3): 646-7 (2015).

2. American Association for Respiratory Care. AARC Clinical Practice Guidelines. Endotracheal suctioning of mechanically ventilated patients with artificial airways 2010. Respir Care. 55(6): 758-64 (2010).

3. Spalding MC, Cripps MW, Minshall CT. Ventilator-Associated Pneumonia: New Definitions. Crit Care Clin. 33(2): 277-292 (2017).

4. Xie J, Yang Y, Huang Y, Kang Y. The Current Epidemiological Landscape of Ventilator-associated Pneumonia in the Intensive Care Unit: A Multicenter Prospective Observational Study in China. Clin Infect Dis. 67: S153-S161 (2018).

5. Papazian L, Klompas M, Luyt CE. Ventilator-associated pneumonia in adults: a narrative review. Intensive Care Med. 46: 888-906 (2020).

6. Coppadoro A, Bellani G, Foti G. Non-Pharmacological Interventions to Prevent Ventilator-Associated Pneumonia: A Literature Review. Respir Care. 64: 1586-1595 (2019).

7. Raimundo RD, Sato MA, Da Silva TD, Abreu LC. Open and Closed Endotracheal Suction Systems Divergently Affect Pulmonary Function in Mechanically Ventilated Subjects. Respir Care. 66: 785-792 (2021).

8. Ardehali SH, Fatemi A, Rezaei SF, Forouzanfar MM, Zolghadr Z. The Effects of Open and Closed Suction Methods on Occurrence of Ventilator Associated Pneumonia; a Comparative Study. Arch Acad Emerg Med. 8: e8 (2020).

9. Hamishekar H, Shadvar K, Taghizadeh M, Golzari SE. Ventilator-associated pneumonia in patients admitted to intensive care units, using open or closed endotracheal suctioning. Anesth Pain Med. 4: e21649 (2014).

10. Ruan SY, Lin FC, Huang CT, Ku SC, Wu HD. Effect of incomplete withdrawal of a closed-suction catheter on airway resistance. Intensive Care Med. 41: 1496-7 (2015).

11. David D, Samuel P, David T, Keshava SN, Irodi A, Peter JV. An open-labelled randomized controlled trial comparing costs and clinical outcomes of open endotracheal suctioning with closed endotracheal suctioning in mechanically ventilated medical intensive care patients. J Crit Care. 26: 482-488 (2011).

# Figures

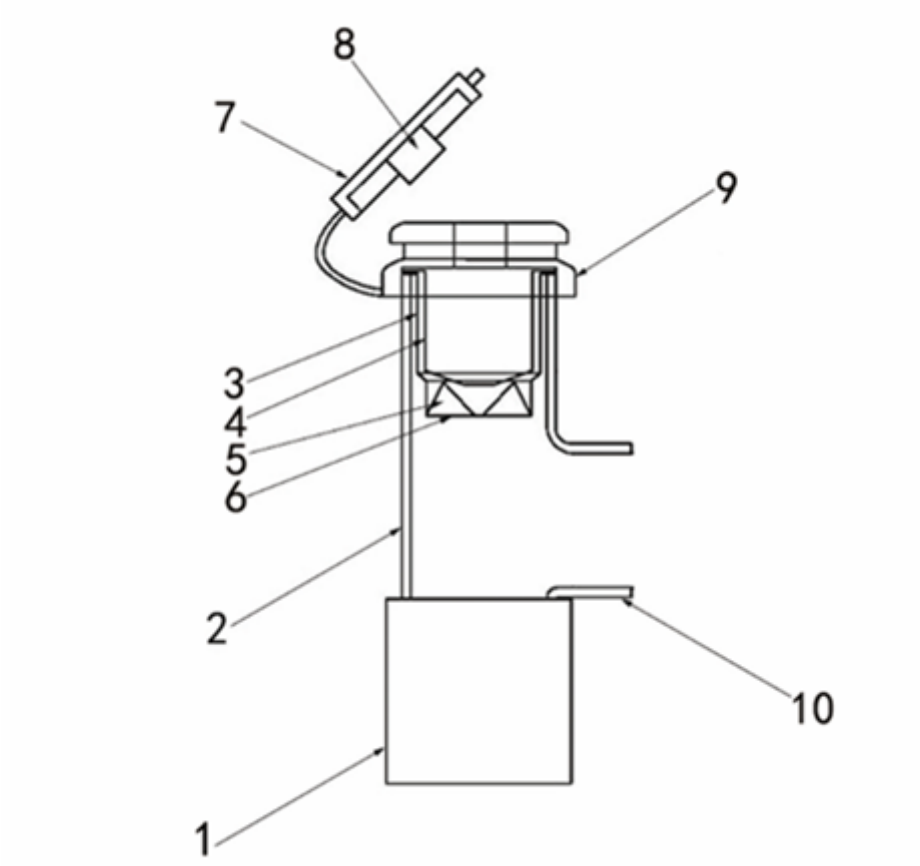


**Figure 1**

Schematic diagram of medical protective respiratory circuit structure

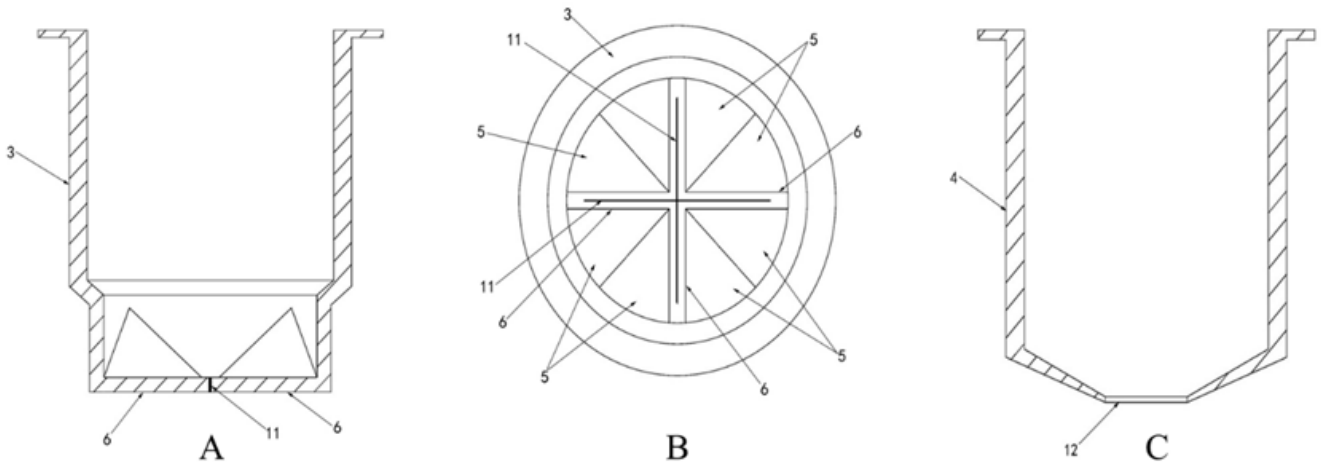


**Figure 2**

Schematic diagram of isolation sleeve and stop sleeve in medical protective respiratory circuit (A: Longitudinal section of isolation sleeve; B: Bottom view of the isolation sleeve; C: Longitudinal section of stop sleeve)

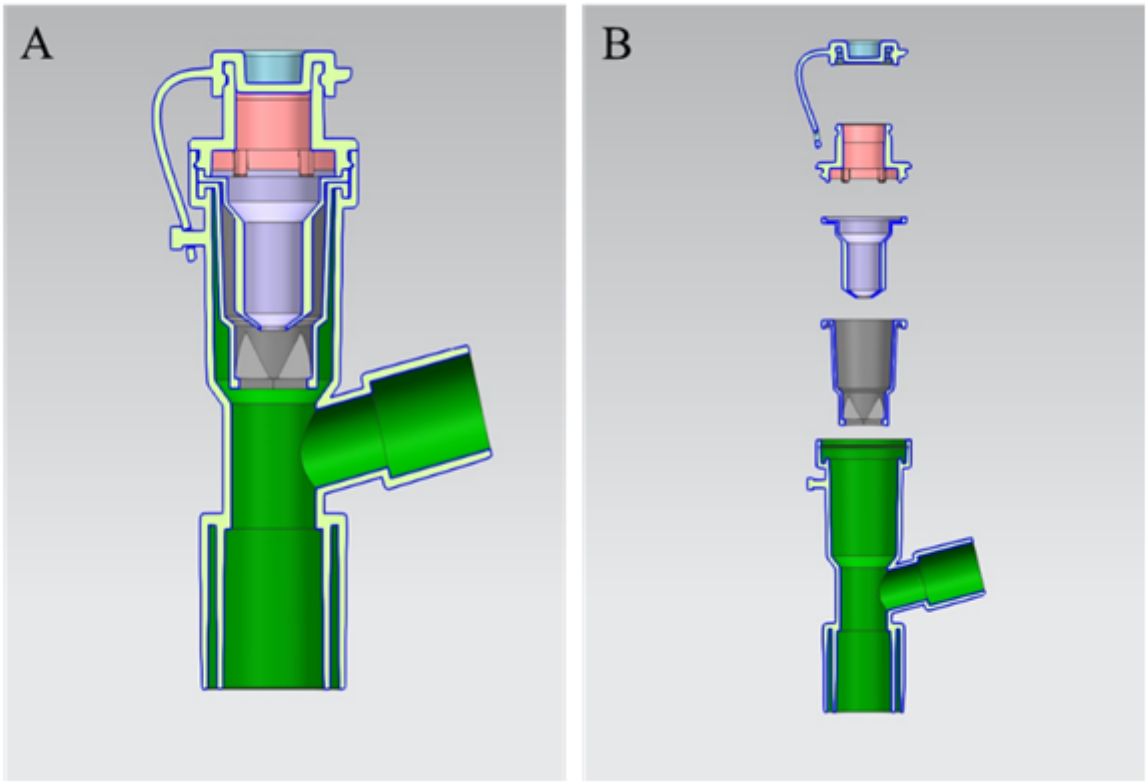


**Figure 3**

Physical diagram of medical protective respiratory circuit