Design and Fabrication of Elevators Using AVR Microcontroller

M. Keykha (mohsen.keykha@gmail.con)
University of Sistan and Baluchestan

Research Article

Keywords: elevator, CodeVisionAVR,movement, simulation, programming.

Posted Date: January 3rd, 2022

DOI: https://doi.org/10.21203/rs.3.rs-1198525/v1

Abstract

Men, along with the progress in his civilization and daily life, felt the need more and more every day that in addition to all the facilities and tools he had created for himself to move horizontally, he needed a tool to move himself and his tools and loads in the horizontal direction. Is. Images have been recorded in history that show that he invented methods for vertical movement in the distant past. Initially, this was done by levers and animals. An elevator is a permanent public vehicle that moves between predefined levels. The elevator is the only means of transportation used by all age groups and is the most common means of vertical movement in the world. The elevator is installed inside an environment that consists of three parts: 1. Engine room 2. Elevator well 3. Well. The gearbox motor acts as the heart of the elevator and the control panel acts as the core of the elevator. The aim of this research is to simulate and build the circuit and the building of the elevator so that it can be equipped with new facilities and sensors by using reprogramming if necessary to make its operation safer and provide more comfort for the passengers. Here we have programmed the AVR microcontroller using codevisionAVR software and performed the simulation using Proteus software.

I. Introduction

Man, along with the progress in his civilization and daily life, felt the need more and more every day that in addition to all the facilities and tools he had created for himself to move horizontally, he needed a tool to move himself and his tools and loads in the horizontal direction. Images have been recorded in history that show that he invented methods for vertical movement in the distant past. Initially, this was done by levers and animals. Humans have long used wheels and pulleys. These tools are the beginning of ideas that end up in the elevator. The first elevator, which is considered a means of transporting people, was built in 1745 by order of Louis XVI [1], which was called a flight chair. Elevators were developed because of the need to move raw materials such as wood and coal from the mountains, resulting in cable elevators in the modern way. These elevators are based on the Atwood car. In the mid-19th century, elevators operated on steam power and were commonly used in factories and mines to carry loads [2]. In 1823, two architects, Burton and Hammer, built a tourist attraction in London called the Climb Room. This attraction was in the center of the city, which was moved by steam power and raised people to a considerable height above the city level, allowing them to see a unique view of the city [3]. But boiler elevators were not safe and the chances of the elevator falling were very high and therefore they were not used to move people. One of the concerns that made all people not want to use the elevator was the fear of the elevator falling. In 1852, Elisha Otis introduced a safety elevator that would prevent the elevator from falling if the cable was cut [4]. He demonstrated his immune system at the New York Exhibition at the Crystal Palace in a deadly show in 1854. He himself boarded an elevator for which he had invented and installed a safety system and ordered that the rope with which the elevator went up and down be cut suddenly. His elevator started to fall quickly but stopped immediately. Otis' invention led to the safety of cable elevators, and this security led to the installation of the first passenger elevator on March 23, 1857 in New York. The first electric elevator was later built in Germany by Werner von Siemens in 1880 [5].

Electric elevators were also much faster than hydraulic and boiler elevators and could handle much heavier loads. In this way, this industry has continuously developed and finally we have access to today's elevators. In the present study, an elevator has been designed and programmed. The purpose of this study is to design and evaluate the performance of the elevator system so that we can make beneficial changes in the performance of the system.

Ii. Methodology

A. Theoritical overview

The elevator designed in this research is designed for a three floured apartment with parking. This system includes a microcontroller and several seven segments along with several DC motors. To open and close the cabin door and also to move up and down the cabin, two motors used in the opposite direction have been used to perform the desired operation in two different directions. The elevator car is made of a 16-character LCD to display the condition of the doors and the cabin floor and a series of switches for the desired commands. Figure 1 shows a block diagram of elevator performance.

Iii. Hardware Inplementation & Design

A. **Hardware design**

The hardware designed in this project includes an AVR microcontroller (Atmega16) and 8 switches (4 in the elevator cabin and 4 at the entrance of each floor). The LCD used in the cabin displays whether the door is open or closed, as well as the floor in which the cabin moves at any time. 7-segments are placed at the entrance of each floor to indicate the floor on which the cabin is located. Because in this small-scale elevator project, we have used armature as a motor. Figure 2 shows a simulation of elevator operation by the Proteus program. The Practical elevator on the with its parts is shown in Figure 3.

B. Working software

CodevisionAVR software is a very powerful software for microcontroller programming that has been used in this project. A view of the programming lines of this project is shown in Figure 4.

Iv. Result

A practical elevator designed in this article was shown in Figure 3 . Now we want to discuss its performance. First we assume the cabin is on the third floor and the user is on the second floor. The user then calls the cabin by pressing the switch installed on the second floor. (We consider the delay time used to close or open the doors to be 5 seconds and the time it takes for the cabin to move between each floor to 10 seconds). After reaching the desired floor and boarding the user by pressing the key on the ground floor of the cabin, first the doors are closed and then the engine that drives the cabin down is activated. The performance details described in Figures 5 and 6 can be seen.

V. Conclusion & Future Work

Many new ideas start with a simple design. In this project, we showed that an elevator can be easily implemented and operated on a small scale using a microcontroller IC and a few simple components. As mentioned earlier in the text, one of the advantages of using elevators in multi-storey buildings is the ease of moving people. Stop times and speed between classes can also be changed. Of course, by using new technologies, a much more accurate system can be built, equipped with more advanced comfort and security facilities. The person should be warned, or by using voice recognition operators, new elevators can be built so that the system can be controlled only by the presence of a person in the cabin and without the use of hands or even using wireless technologies.

Declarations

Ethics approval and consent to participant

Not Applicable.

Consent for publication

I express my satisfaction with the accuracy of the text and the published photos, so anyone can read the articles published in the magazine.

Availability of data and material

Not Applicable.

Competing interest

Not Applicable.

Authors' contributions

The author confirms sole responsibility for the following: study conception and

design, data collection, analysis and interpretation of results, and manuscript

preparation.

Acknowledgements

Not Applicable.

Funding

Not Applicable.

References

[1] Garaeva AA, Slotboom DJ. Elevator-type mechanisms of membrane transport. Biochemical Society Transactions. 2020 Jun 30;48(3):1227-41.

[2] Saravanan S. DEVELOPMENT AND ANALYSIS OF AN ELEVATOR AND DRAG EFFECT FOR AN AUTOMOBILE.

[3] Al-Kodmany K. Tall buildings and elevators: A review of recent technological advances. Buildings. 2015 Sep;5(3):1070-104.

[4] Glaudemans M. Urban innovation for resilient cities: Eindhoven 2050. InCulture, Innovation and the Economy 2017 Sep 27 (pp. 10-16). Routledge.

[5] Orloff MA. Modeling the Great Inventions of Carl and Werner von Siemens with Modern TRIZ. InModern TRIZ Modeling in Master Programs 2020 (pp. 386-429). Springer, Cham.

Figures

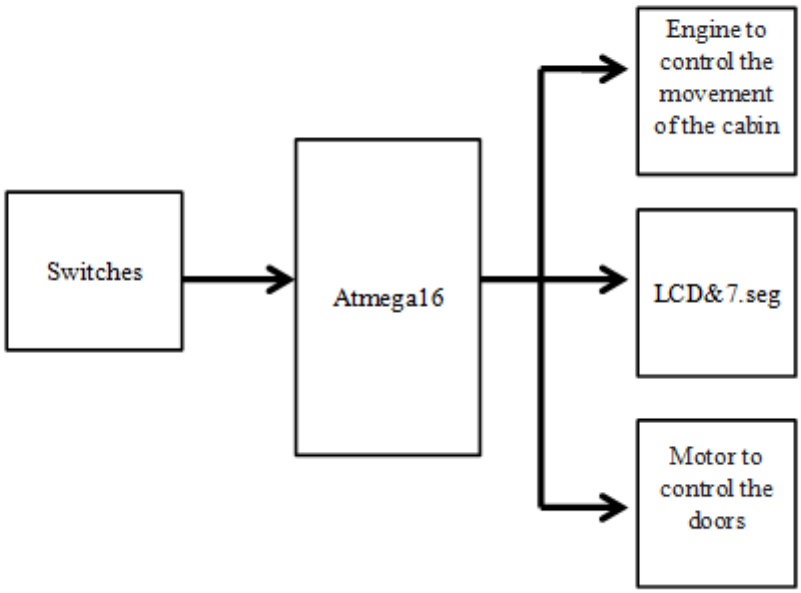

Figure 1

Block diagram of elevator system performance

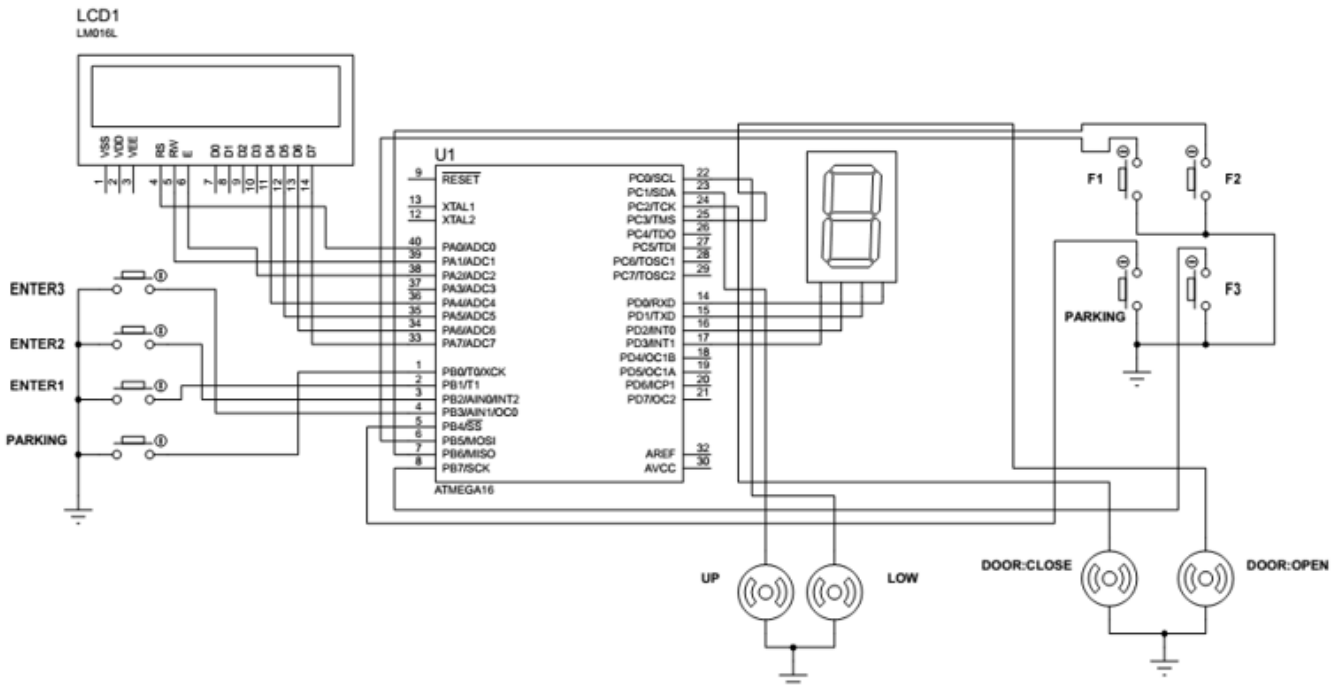

Figure 2

Elevator simulation using Proteus software

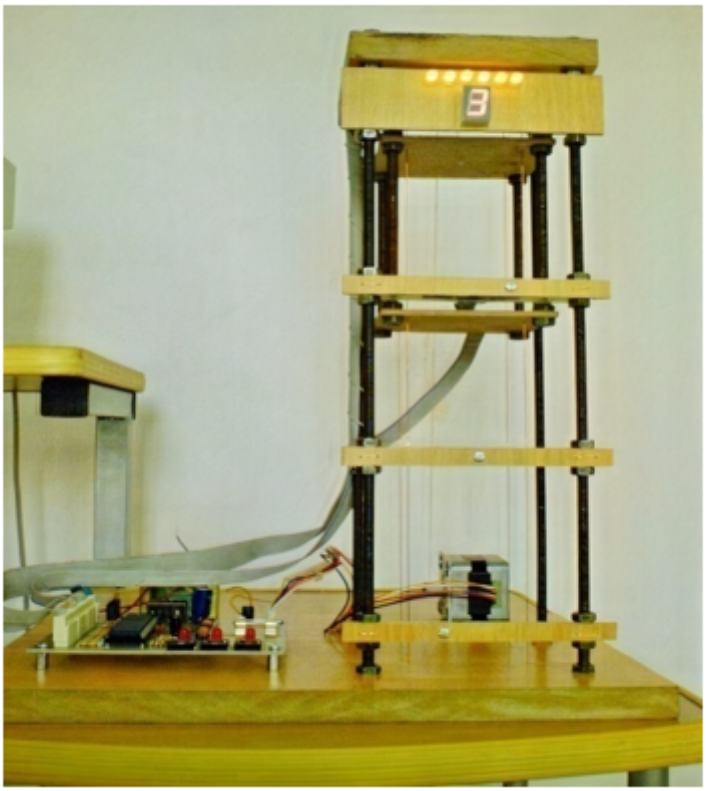

Figure 3

Practical elevator built with cabin, body and control circuit

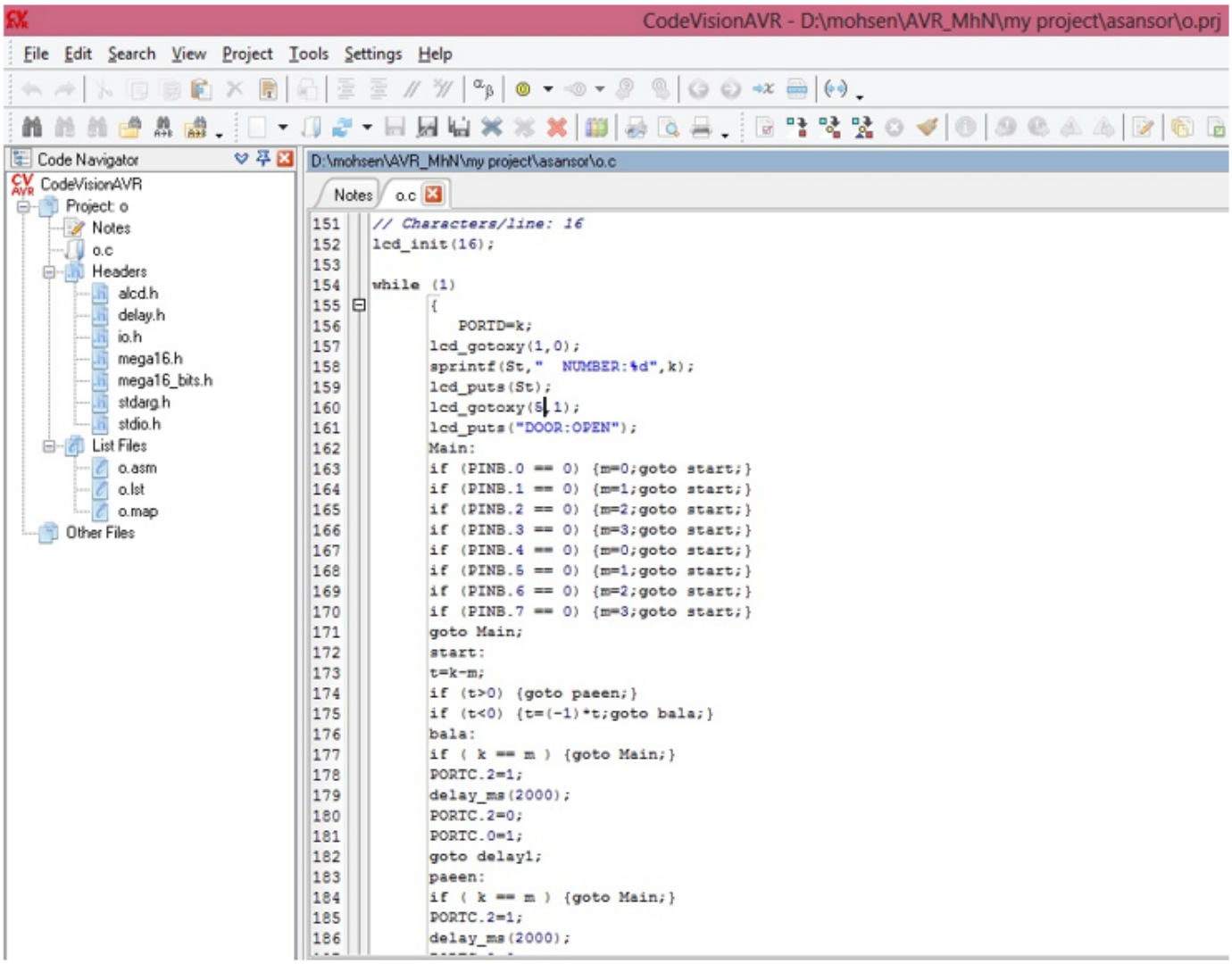

Figure 4

View elevator programmed lines using CodeVisionAVR software

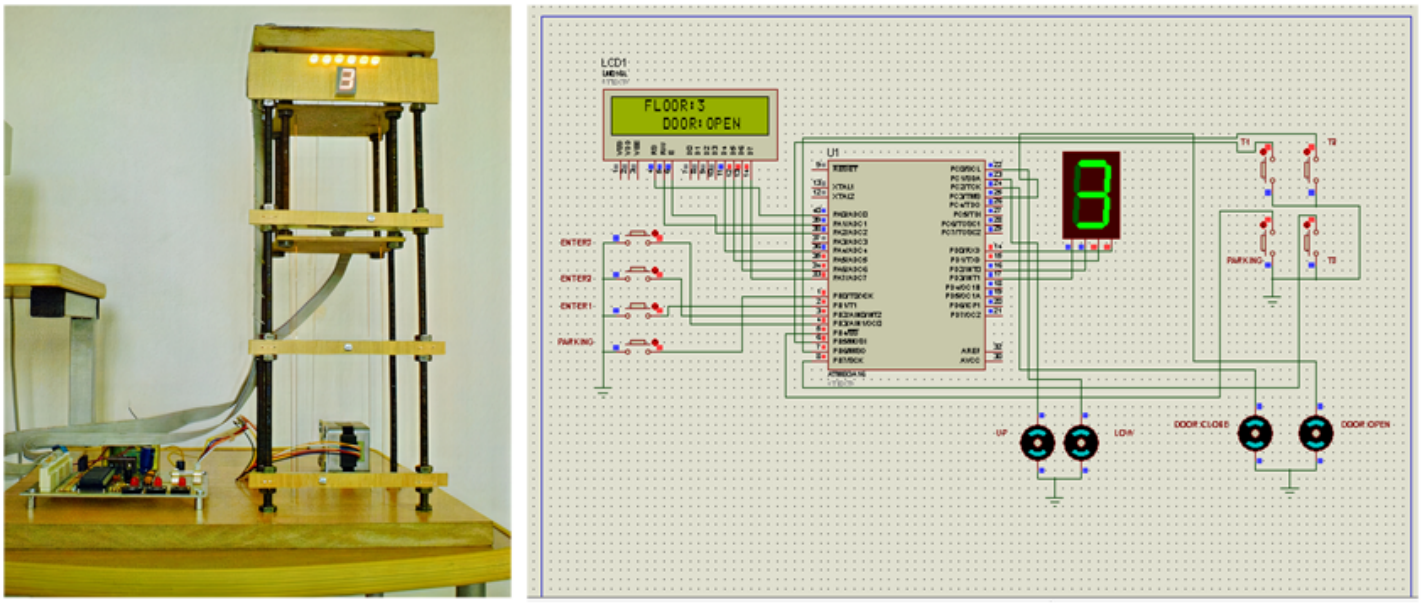

a) b)

Figure 5

The presence of the cabin on the third floor is ready to receive orders from the operator.

a) practical example of an elevator with a cabin and a control circuit. b) Simulated model of elevator control circuit.

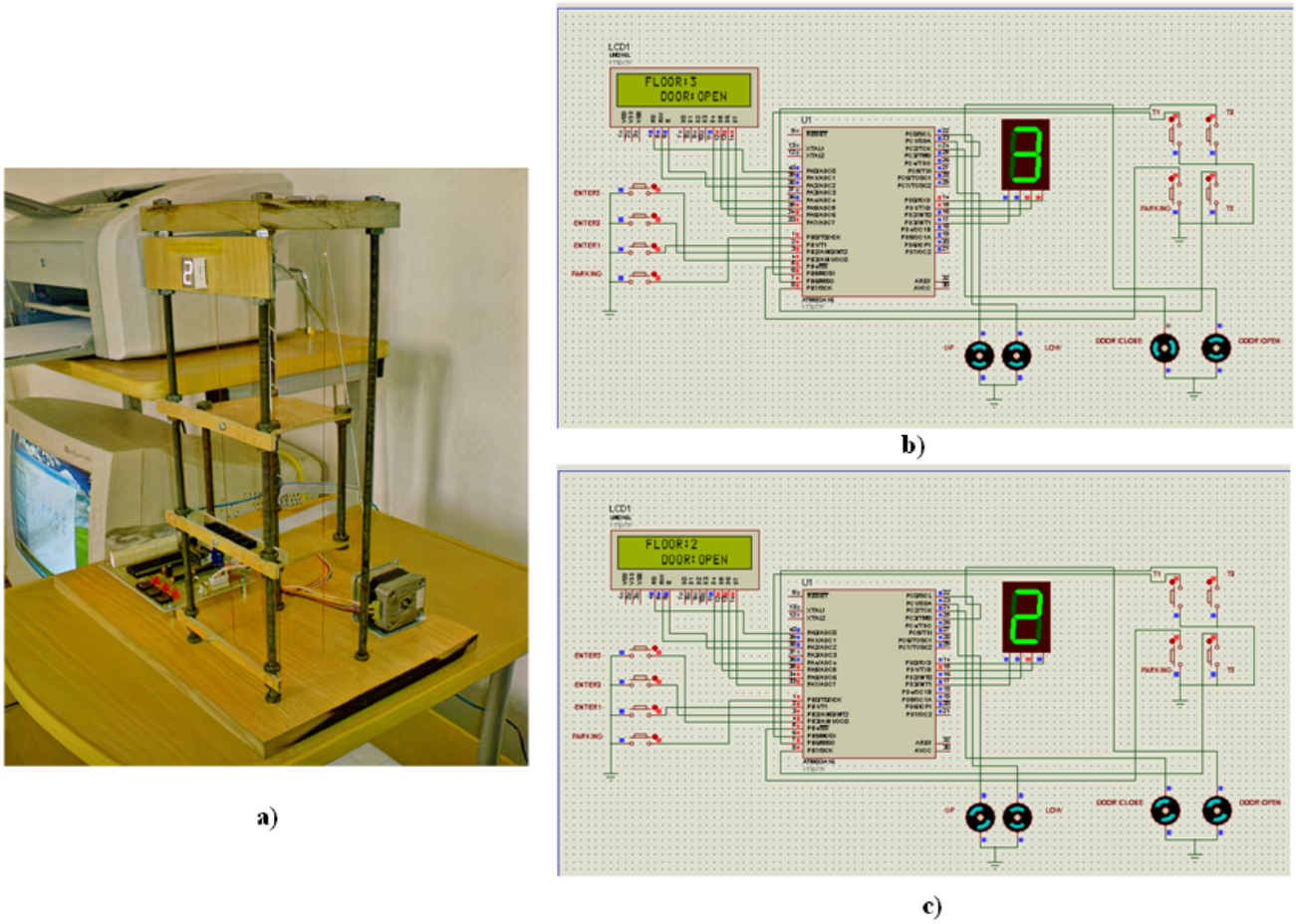

a) b) c)

Figure 6

running the elevator from the parking lot to the second floor. a) The presence of the cabin on the third floor. b) Show the movement of the cabin door engine for five seconds and then start moving. c) Reaching the cabin to the second floor and opening the cabin door