Research on the Cross-modal Cognitive Neural Computing Framework of the Brain and Mind Inspired Intelligence

Yang Liu (ly.sci.art@gmail.com)
Henan University https://orcid.org/0000-0001-7018-646X
Jianshe Wei
Henan University

Research Article

Keywords: Brain and mind inspired intelligence, Cross-modal cognitive neural computing, Multimedia neural cognitive computing, Deep learning, Cognitive computing

Posted Date: June 10th, 2022

DOI: https://doi.org/10.21203/rs.3.rs-1521871/v1

Research on the Cross-modal Cognitive Neural Computing Framework of the Brain and Mind Inspired Intelligence

Yang Liu[1] **• Jianshe Wei**[2*]

Accepted: DD MM, 2022

Abstract

To address the problems of scientific theory of brain and mind, common technology and engineering application of nature-inspired intelligence, this paper is focused on research in the semantic-oriented computing framework design for multimedia and multimodal information. The multimedia neural cognitive computing model of brain-inspired computing was designed based on the brain mechanism of nervous system and mind architecture of cognitive system. Furthermore, the semantic-oriented hierarchical cross-modal cognitive neural computing framework of brain-like computing was proposed based on multimedia neural cognitive computing model. Furthermore, the formal description and analysis of cross-modal cognitive neural computing framework was given. It would effectively improve the performance of semantic processing of multimedia and cross-modal information such as target detection, classification and recognition in high-resolution remote sensing image, and has far-reaching significance for exploration and realization brain and mind inspired computing.

Keywords Brain and mind inspired intelligence · Cross-modal cognitive neural computing · Multimedia neural cognitive computing · Deep learning · Cognitive computing

1. Introduction

Brain and Mind Inspired Intelligence (BMII) is an innovative bio-inspired computing method of bionics, which enlightened by cognitive framework of mind function and neural mechanism of brain structure. BMII would realize state-of-the-art intelligence system which has advanced in computing ability, efficiency, and energy consumption by Brain-Inspired Computing (BIC), Mind-Enlightened Computing (MEC) and Brain-Like Computing (BLC). BMII constructs neural cognitive computing fundamental theories and models, and explores the new generation computation in the algorithm, architecture and system. The research contents of BMII include the intelligence scientific theory, brain-inspired algorithms and brain-like hardware for learning and processing, such as NeuroMorphic Computing (NMC), NeuroMorphic Engineering (NME) and NeuroMorphic Device (NMD). For the study of the brain-inspired algorithm, which one is brain-inspired cognitive simulation from the global macroscopic functional, the other is reverse engineering the brain-like(Ng 2009) neural structural emulated from the local microscopic structures of neurons, synapses, and networks. But there is still a lack of effective research how to assemble advanced function of the complex system from the local network in mesoscopic.

BMII has been an obvious success at present, but it is far from reaching the general autonomous intelligence level, and it lacks the ability of cross-modal cognitive and multimedia in both models and algorithms. There is still a long way to go to study the gap between natural intelligence and brain-inspired intelligence (ZENG et al. 2016). Until now, the study of the brain-inspired model has not supported the uniform mind function such as sensation, perception, cognition

✉Corresponding author. Jianshe Wei(Email: jswei@henu.edu.cn) and Yang Liu(Email: ly.sci.art@gmail.com)
[1] Henan Province Engineering Research Center of Spatial Information Processing, Henan Key Laboratory of Big Data Analysis and Processing, College of Computer and Information Engineering, Henan University, Kaifeng 475004, China
[2] Laboratory of Brain Function and Molecular Neurodegeneration, Institute for Brain Science Research, School of Life Sciences, Henan University, Kaifeng 475004, China

and behavior.

To address problems of cross-modal intelligence, Multimedia Neural Cognitive Computing (MNCC) model, Cross-modal Cognitive Neural Computing (CCNC) framework, algorithm desgn and system application for BMII was researched in this paper. The study is organized as follows. Section 2 provides a research background, which deals with a literature review, including studies of BMII, brain and mind research project, statistical learning, cognitive computing, deep learning and NMC. Section 3 gives a definition of the study area, structure and mechanism of the nervous system, and function and architecture of the cognitive system. Section 4 gives the formal description of CCNC framework, algorithm design and system application for semantic computing. Finally, we conclude our work and propose potential future work on this topic in Section 5.

2. Related work

2.1 Research projects of brain and mind

With the development of Turing machine proposed in 1936 and the birth of first electronic computer ENIAC in 1946, the information technology has lay a foundation for realizing the dream of intelligent technology. However, since the concept of artificial intelligence was proposed in 1956, the related research has developed in the ups and downs between success and failure. Many countries have made the significant investment in the scientific research of artificial intelligence in the past 66 years. Some initiatives and projects about intelligent behavior, brain and mind have been proposed respectively, such as Decade of the Brain (1990-2000), Decade of the Behavior (2000-2010) and Decade of the Mind (2012-2022). In addition, brain research projects of some countries have been launched successively, such as US BRAIN Initiative, EU Human Brain Project, Japan Brain/MINDS, China Brain Project, Brain Canada, Australian Brain Initiative, Korea Brain Initiative and Israel Brain Technologies, etc.

The approaches and ideas of neuroscience to study the brain and cognitive science to study the mind will tend for fusion and interaction. Elucidation of the neural mechanisms of cognitive processes in the brain allows us to understand mind principles, and facilitates the intervention and diagnosis of brain disease. It also helps the development frontier science, key technologies and engineering bottlenecks in BMII and provides the basis for a next generation artificial intelligence with design beyond von Neumann architecture.

2.2 Cognitive computing

The Bayesian theory has an indispensable role in the statistical learning. The Bayesian mechanism of the brain has been validated by a lot of experimental results in psychology and neurophysiology. According to Bayesian probability, causal inference, and statistical theory, it can simulate the perception and cognitive process of visual and aural, which can construct a unified cognitive theoretical framework.

As a a successful technique and powerful method, cognitive computing has existed for a long time, but it has been making a breakthrough in recent years. Literature(Modha et al. 2011) seeks nothing less than to discover, demonstrate, and deliver the core algorithms of the macaque monkey brain. Watson system based on DeepQA and transfer learning to simulate cognitive processes of the human mind such as learning, thinking and decision making.

2.3 Neuromorphic computing

There are two main ways to build general artificial intelligence, namely BIC and BLC. BIC simulates and designs intelligent model inspired by top-down brain function, including Artificial Neural Network (ANN) and deep learning. BLC emulates bottom-up brain structure to realize intelligent system. It includes three main forms: the NeuroMorphic Engineering (NME) of neurons is established by sub-threshold analog circuit, the NeuroMorphic Computing (NMC) (Chen et al. 2018) of Spiking Neural Networks (SNN) is realized by digital system, and the NeuroMorphic Device

(NMD) of spiking neural network memristor-based (Zhou et al. 2017) is constructed with new memory materials.

Carver Mead envisioned build neuromorphic electronic systems based on analog VLSI (very large scale integration) circuits, which established a new paradigm in hardware computing of BLC (Mead 1990). Guided by brain-like 'spiking' computational frameworks, NMC is modeling and emulation of the bionic brain for machine intelligence-promises to realize artificial intelligence while reducing the energy requirements of computing platforms (Roy et al. 2019). NMC mimics neuro-biological architectures by VLSI systems containing electronic analog circuits, which aiming at brain-like capabilities and efficiencies.

SNN is also known as the third generation of neural network models, which increases the level of realism in a neural emulation. Spiking neurons model includes Hodgkin-Huxley, Leaky Integrate and Fire (LIF), Spike Response Model (SRM) and Izhikevich etc. Besides neuronal and synaptic state, SNN also incorporated the concept of time into their operating model. The SNNs exploit spatio-temporal information based on sparse and dynamic spiking event, and have advantage of low-power computing. The spiking neurons have a discontinuous activation function, and emit discrete spikes that are nondifferentiable; hence it cannot use directly the gradient-descent BackPropagation (BP) algorithm to training SNNs.

At present, BMII has achieved remarkable achievements in the brain-like neuronorphic technology. A large number of 'Big Brain' chips and systems have been designed, such as NeuroGrid, BrainScaleS and SpiNNaker, Darwin NPU, Tianjic (Pei et al. 2019), TrueNorth(Paul A 2014), Memristor, TPU (Jouppi et al. 2018), Loihi, and DianNao family (Luo et al. 2017). In addition, synaptic efficacy and synaptic plasticity can be accomplished using emerging non-volatile memristive technologies such as resistive random-access memory (RRAM), phase-change memory (PCM), floating-gate transistor, and memristive dot products. Furthermore, the much brain-inspired software system has been developed, such as SpikeNET, NEURON, GENESIS, BRAIN and NEST emulator etc. Compass is a multi-threaded; massively parallel functional emulator and a parallel compiler that mapping a network of Long Distance Pathways (LDP) in the brain to TrueNorth (DeBole et al. 2019). Literature (Eliasmith et al. 2012) present neuron models of the brain as Spaun (semantic pointer architecture unified network) for Nengo, which can emulate the human tasks, such as image recognition, serial working memory, reinforcement learning, counting, question answering, rapid variable creation, and fluid reasoning.

2.4 Deep learning

Deep learning is also known as feature learning, which is a combination of big data and high-performance computing. The development of deep learning has gone through four stages: 1) McCulloch and Pitts put forward a neuron model for logic and computation in 1943, which created the first Computational Theory of Mind and Brain (CTMB) (Piccinini 2004); 2) Rosenblatt proposed perceptron for linear classification in 1958; 3) Multi-layer perceptron (MLP) based on BP algorithm is used to solve nonlinear problems; 4) Deep learning based on big data and high performance computing.

In essence, deep learning is also a classic neural computing of structuralist technology. Combined with the traditional machine learning algorithms of functionalist and behaviorist, it can effectively solve the problems of high energy consumption and low intelligence of the existing computing system. For example, AlphaGo improved the performance of the Go program with CNN, reinforcement learning, and Monte Carlo tree search algorithm (Mnih et al. 2015; Silver et al. 2016). It is mathematically equivalent to using an MLP after the convolutional layers. With the engineering application development of deep learning, the cognitive mechanism such as perception, attention, memory, and emotion were employed multimedia intelligent processing in image, video, audio and speech. The more and more novel Deep Neural Network (DNN) were designed, such as capsule network (Sabour et al. 2017), Generative Adversarial Network

(GAN) (Creswell et al. 2018). For example, it can greatly improve the performance of machine translation and intelligent retrieval in natural language processing by the employed Recurrent Neural Network (RNN), Long Short-Term Memory (LSTM), Gated Recurrent Unit (GRU), encoder-decoder model (Ma et al. 2017), and GPT-3 model with 175 billion parameters(Tom B. Brown 2020). In essence, DNN is also a graph model. Inspired by the great success of deep learning in machine learning tasks which are typically represented in the Euclidean space, Graph Neural Network (GNN) (Wu et al. 2020) is introduced to solve the learning task of non-Euclidean domains.

3. Theory of nervous system and cognitive architecture

The semantic computing in a visual scene or auditory scene is a complex scientific problem. It has an essential enlighten to realize semantic computing of target recognition, and multimedia intelligent processing that the function, structure and social behavior of the cognitive framework and the neural mechanism. With the rapid engineering development of deep learning and cognitive computing in the field of artificial intelligence, more and more heuristic algorithms based on biological intelligence have emerged. However, there are essentially different from scientific theory research, technical route and method, and implementation of engineering and system among neuroscience, cognitive science and computing science. In order to solve the complex problem of audio-visual semantic computation, the computational model is established urgently for simulating the brain, inspired by the framework of cognitive function and the mechanism of neural processing.

Currently, there are two main aspects which have attracted much attention in BMII. One is the BIC method based on systematic behavior to simulate cognitive function, the other is the BLC method based on neuron, synapse or local network structure to emulate neural mechanism.

Definition 1 (MNCC). Multimedia Neural Cognitive Computing (MNCC) is to construct multimedia information processing model and algorithm for the purpose to solve the problems of semantic processing of unstructured, massive, multi-modal, and temporal-spatial distribution in multimedia information. MNCC is a BIC model, which establishes a new generation of the multimedia information processing model and algorithms with cognitive computing of system behavior in macroscopic level, and neural computing of physiological mechanisms in microscopic level.

Definition 2 (CCNC). Cross-modal Cognitive Neural Computing (CCNC) is being BMII of cross-modal information processing framework and mind-inspired cognitive computing method of cross-media knowledge reasoning based on MNCC model. CCNC is a BLC framework, which mainly solves the problems of cross-modal semantic computing by the mechanism of multisensory integration and multimodal cooperative cognitive.

MNCC model is a kind of BMII for multimedia processing based on the structure and mechanism of the nervous system, and the function and framework of the cognitive system. It is an important field to realize the intelligent processing of multimedia data. Aiming at the bottleneck of cross-modal semantic computing, we focused on the hierarchical CCNC framework and algorithm based on mind-inspired cognitive computing and brain-inspired deep learning.

3.1 Structure and mechanism of the nervous system

It is a source and a motivation of BMII theory that the structure and mechanism of the nervous system, and function and the framework of the cognitive system. There is a systematic study of the brain's information processing mechanism in different disciplines. On the one hand, the neuroscience analysis brain mechanism of neural processing at the levels of the cortical structure and the neural circuits based on the white box method. On the other hand, cognitive science research model of mind's information processing through cognitive function and the phenomenon based on the black box method. However, artificial intelligence of computer science realizes logic computation of a finite state machine

based on Turing machine and Von Neumann architecture. Although computer science has made great advances, the principle and structure of brain, mind and computing machine are essentially different.

Behind the neurodynamic characteristics of brain structure and the emergence of social behavior of mental function, there are the basic laws of complex intelligent system. Generally, the neocortex of the cerebellum is the core component of intelligent processing in the field of neurocognitive science; the thalamus is the switch of information entry and selective attention; the limbic system and the hippocampus are the controllers for memory and emotion. The human central nervous system is composed of white matter and grey matter, and has the obvious symmetry and contralateral. The neocortex structure of the gray matter is similar to the digital-analog electronic processing unit with processing linear and nonlinear function. The LDP of the white matter made up the complex White Matter Network (WMN). It can be regarded as wiring diagram of neural processing. So the neocortex structure and WMN are very important for understanding the overall structure of the brain.

3.1.1 Cortical model

The nervous system model includes 3 types such as nervous system description model, neural mechanism model, and neural function interpretation model. The description model quantitatively describes nervous system based on the experimental data. Mechanism model emulates nervous system how to run. The interpretation model explores the basic principles of the nervous system, and the construction of the nervous system why so run. There are common nervous system models such as neuron model, synaptic model, cortical model and structural model of the nervous system and so on.

According to the evolutionary hypothesis of the triune brain (Pogliano 2017), Paul MacLean divides the model of human brain structure and function into 3 specific regions: archicortex, paleocortex and neocortex. The archicortex originates from motor brain (reptilian), which cortical cortical structure is not very obvious. The paleocortex of the emotional brain (paleomammalian) lies in limbic system consists of 3 layers of neurons. The neocortex consists of 6 layers of neurons, which accounted for 90% of the area of the rational brain (neomammalian). The triune brain hypothesis is a controversial and extremely simplified model(CU 2010). Generally, the neocortex can be divided into primary areas, secondary areas, association areas in function.

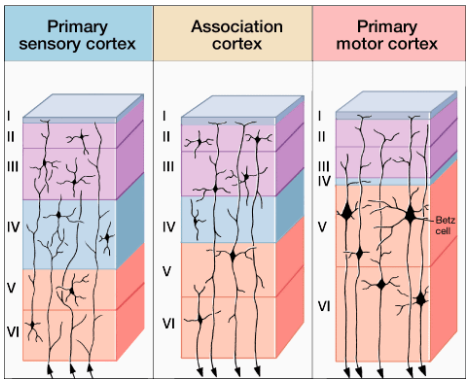

Figure 1 Cortical structure

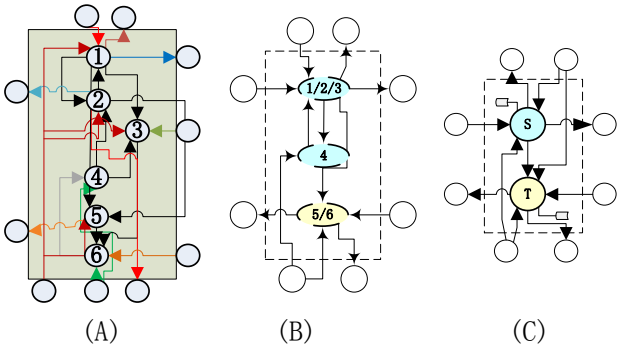

Figure 2 The hierarchical structure model of the micro-column. (A) Structure of 6 nodes micro-column. (B) Structure of 3 nodes micro-column. (C) Structure of 2 nodes micro-column.

The layer structure of 3 types cortical areas(Joseph 2000) as showed in Figure 1. The research shows that the 6 layers of the neocortex have different functions. For example, L4 layer receives inputs information. L2 and L3 layers make up a local circuit for information processing. L1 layers achieve intersection and inhibition projection information of internal neurons, and information output from L5 and L6 layers.

In view of the similarity neocortical structures and cooperation of cognitive function, we can put forward the following Brain and Mind Mechanism Hypothesis (BMM Hypothesis).

Hypothesis 1 (BMM Hypothesis). It can be assumed that the information processing mechanism of the neocortex is universal in the brain areas. The audio-visual and other sensory procession can be modeled by uniform cortical function, and it can be applied to prediction, learning, reasoning and other general problem solver.

Most studies suggest that neocortex has the similar structure in vision area, audition area, and association area. Cortical columns are a basic unit for information processing in neocortex. Cortical columns have the phenomenon of hierarchical processing and the mechanism of lateral inhibition of each other. Micro-columns consist of local circuits in neocortex. Physical stimuli are perceived and encoding to generate neural spiking coding by visual-auditory sensory neurons. The micro-column is feature detection, and macro-column or super-column makes up of micro-columns to process special information and generates some cognitive functions. The spiking probability is propagating among micro-columns. Micro-columns collect information from lower neighbor micro-columns and disseminate information from upper neighbor micro-columns (Liu et al. 2018a). At the same time, it also receives feedback information from LDP, and prediction information from an upper neighbor.

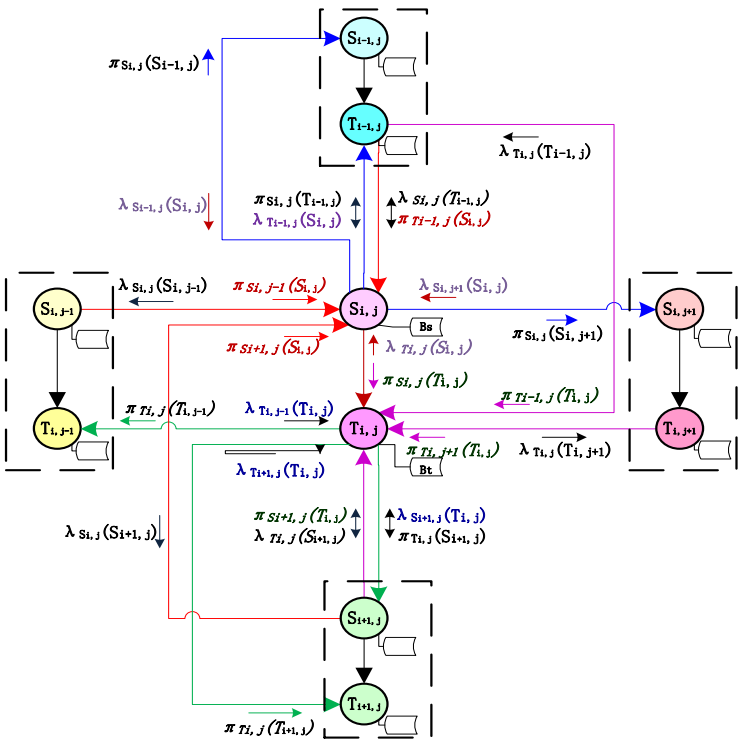

Figure 3 The structure model of the super-column

(*1*) *Temporal-spatial structure of micro-column node*

For simplicity in the model design, we firstly merge six nodes micro-column (Figure 2 A) to triple nodes micro-column (Figure 2 B). Middle layer (L4) receives input information. lower layers (L5 and L6) send output information, and upper layers (L1, L2, L3) process information. In fact, cortex information processing has the spatial-temporal property. So we further simplify the model structure with double nodes. It is noted that this simplification does not lose the advantage of bionics. For instance, the node is double structure in HTM, RBM, SVM and so on. As shown in Figure 2 C, S mimicking functions from L1 to L4, and simulates memory and spatial patterns process (Liu et al. 2018a). T

mimicking functions of L5 and L6, and simulates memory and temporal patterns process. Both nodes S and T memories belief which comes from owner and other nodes.

(2) *Hierarchical network architecture of super-column*

According to neurocognitive system hierarchical architecture and temporal-spatial locality, super-column architecture also uses hierarchical, multi-level, and bidirectional mapping structure. Super-column composed by a micro-column with principles of "the same layer collaborative" and "hierarchical processing" (Figure 3) (Liu et al. 2018a).

3.1.2 Long distance pathways and neural circuits

According to the whole brain LDP database, the frontal lobe has the core nodes, and the thalamo-cortical projection system is the key connection in network structure of the human's brain. Both human visual system and human auditory system have a dual stream model: dorsal and ventral pathway, as shown in figure 4. "What" is happening in the dorsal pathway, and "where" is happening in the ventral pathway.

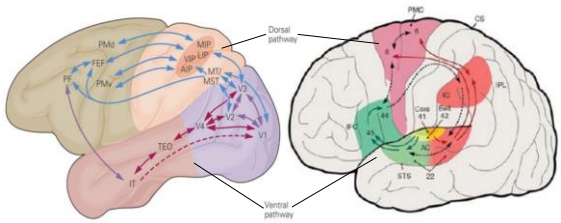

Figure 4 The dorsal and ventral pathway in human visual system (left) and human auditory system (right)

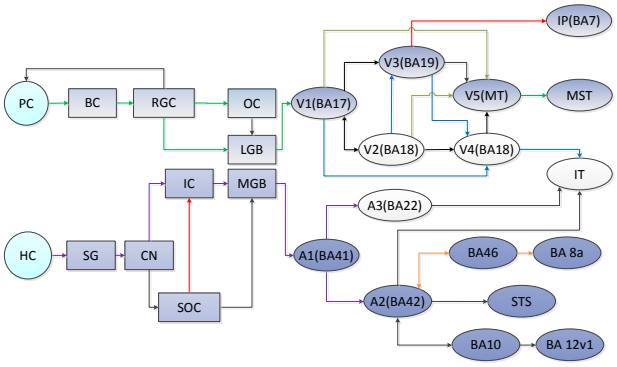

Figure 5 The processing pathway model of human visual system (up) and human auditory system (down)

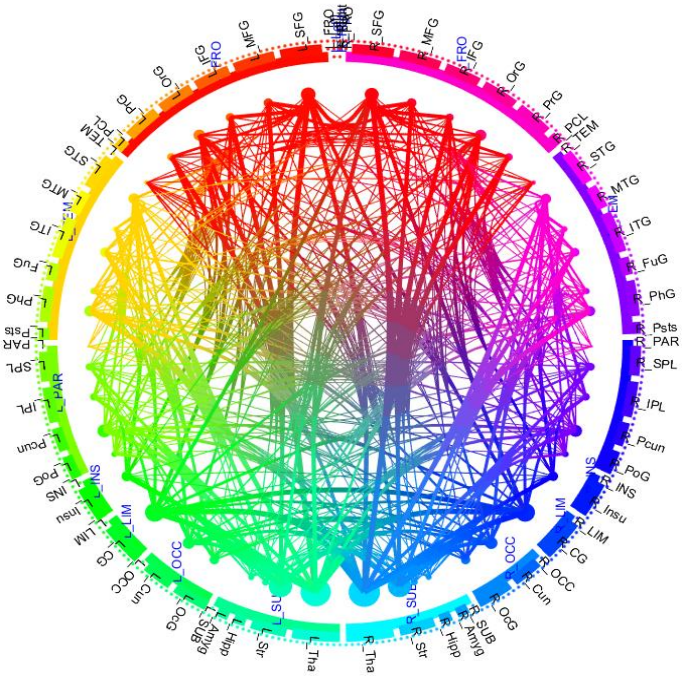

Figure 6 WMN structures with connection weights visualization on 48 brain regions

The high accuracy human brain LDP database based on the experimental data taken from documents (Fan et al.

2016b; Tzourio-Mazoyer et al. 2002) was constructed. Figure 5 shows the pathways model in human visual system and human auditory system (Liu et al. 2014; Liu et al. 2013). Figure 6 is our WMN visualization effect of the 48 regions which consider the connection weights and nodes size. There are a large number of long-distance loops in the human brain WMN, and there are also a large number of connections between the thalamus and the cortex. So the relay nuclei of the thalamus are a controller of the selective attention to sensory information, and the association nuclei of the thalamus are a switch of cortical processing information.

The hierarchy of cortical function and structure of neural pathways and circuits can provide significant evidence for the neural cognitive model. Neural circuits are the important material of relevance such as feedback, stochastic resonance, recurrence iterative, resonance, memory, emotion, attention, language, and thinking. It can inspire for build neural cognitive model that the hierarchical structure of cortical function, and the structure between the neural pathways and loops. Studies indicate that the central nervous system is a scale-free and small-world complex network. On the basis of the WMN visualization and document (Liu et al. 2018a), we propose a simplified structure model of the whole brain WMN in Figure 7.

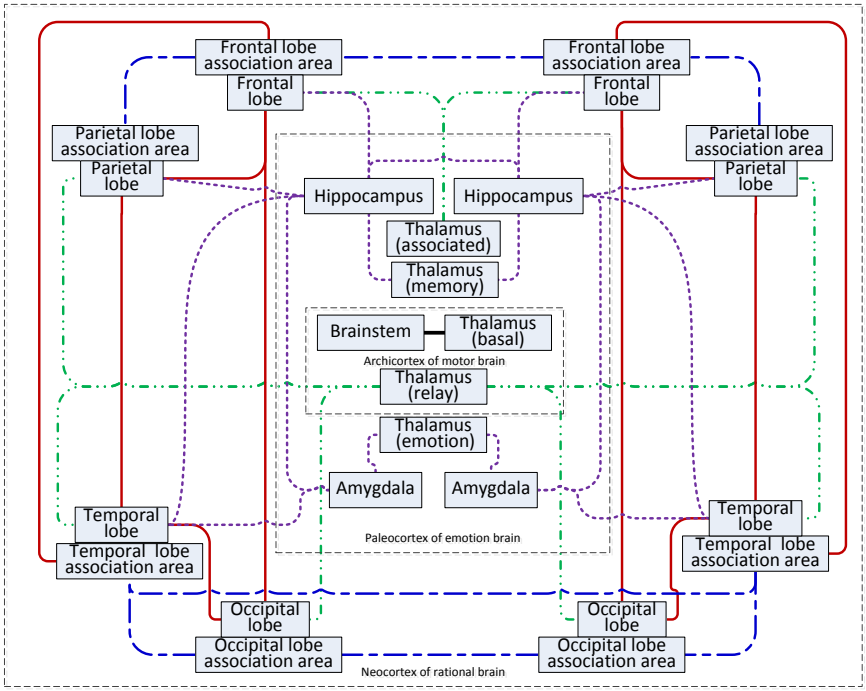

Figure 7 The WMN structure model

3.1.3 Hierarchical temporal memory

Hierarchical Temporal Memory (HTM) model(George and Hawkins 2009) is a kind of neocortex structure and function by Jeff Hawkins and Dileep et al. It adopted Bayesian Belief Propagation (PBP) theory to explain the neocortex process of recognition and reconstruction (Figure 8). In order to further simulate the structure of the neocortex, the concept of the cognitive domain of sparse distributed representation and other neuroscience concepts, such as the dendrites, synapses, and so on, is introduced. It proposed Cortical Learning Algorithm (CLA) in HTM, and its fundamental idea is hierarchy structure, and invariant representations of spatial patterns and temporal patterns and sequence memory.

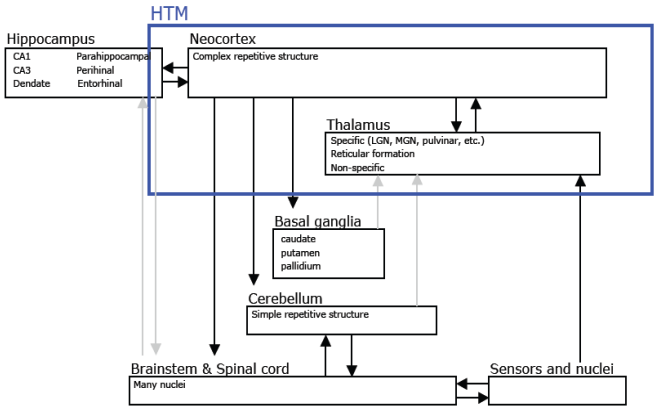

Figure 8. HTM model.

3.2 Function and architecture of the cognitive system

Generally, the human's mind activities involve many aspects in cognitive neuroscience. Specifically, it includes sensation (such as light, sound, touch, taste, smell, etc.), perception (such as seeing, hearing, feel, tasting, smelling, etc.), behavior (such as movement, reaction, choice, interaction, etc.), and cognition (such as attention, memory, emotion, language, logic, language, reasoning, understanding, problem-solving, planning, etc.). Cognitive science explored and research on human's thinking mechanism, especially the processing mechanism by constructing the cognitive model. It also provides a new architecture and technology for the design of intelligent systems.

In cognitive psychology, there are many cognitive frameworks such as the ACT-R (Adaptive Control of Thought-Rational), SOAR (State, Operator And Result), ART (Adaptive Resonance Theory), synesthesia model, elementary perceiver and memorizer semantic network, human associative memory, GPS (General Problem Solver), PDP (Parallel-Distributed Processing) and agent model et al.. Among them, cognitive theory of Bayesian probabilistic and PMJ (Perception, Memory, and Judgment) model(Fu et al. 2014b) should also deserve our attention.

3.2.1 Cognitive theory of Bayesian probabilistic

Since the Bayesian proposed the probabilistic theory in 1963, the probability reasoning and decision-making of the uncertainty information had become an important content of the researches on the objective probability and cognitive processing. Bayesian rule describes the likelihood between the priori probability (marginal probability) $P(x_i)$ and the posterior probability (conditional probability) of the historical information $P(x_i|x_j)$ The Bayesian rule provides a method for modifying and reasoning about the probability distribution of the subjective judgment $P(x_i)$ for observed phenomena. If x_i,$x_j$is condition independent, the sum-product rule can be can be derived by Bayesian inference as follows:

$$\begin{cases} Sum\quad rule: \quad P(x_j) = \sum\limits_{i=1,2,\ldots,n,i\neq j} P(x_j, x_i) \\ Product\quad rule: \quad P(x_1, x_2, \ldots, x_n) = \prod\limits_{i=1}^{n} P(x_i \mid \pi(x_i)) \end{cases}$$
$$s.t.\ P(x_i \mid x_j) = \frac{P(x_j \mid x_i)}{P(x_j)} P(x_i),\ P(x_i x_j) = P(x_i)P(x_j) \tag{1}$$

It is the mainstream method of machine learning and reasoning depending on the uncertainty representation of the probability, the Bayesian rule, and the extension model. Cognitive researchers use Bayesian brain model(Valladares et al. 2017) to simulate the cognitive process and model of mind. It is investigated cognitive processing law of subjective probability estimation by a probability model. Bayesian brain theory holds that the brain is a kind of predictive machine, and cognition is the process of probability calculation.

3.2.2 Perception, memory and judgment model

Cognitive science researchers think that between the cognitive of the human mind and the computer information is similar in processing process. They are establishing cognitive computing theory according to computers to simulate human cognitive processes. It is research and analyses the processes and principles of human cognition, discover the main stages and pathways of cognitive processes, and establish the relationship between cognitive processes and computing workflow.

Figure 9 is a cognitive computing model, which is constructed based on PMJ model from literature(Fu et al. 2014a). Cognitive processing mainly consists of three main stages which include perception (a_1), memory (b_1) and judgment (c_1) in PRJ model. There are three kinds of pathways, summarized as the fast processing pathway (f_1), the fine processing pathway (d_1, d_2 and d_3), and the feedback processing pathway (e_1 and e_2). The perception, memory and judgment of the cognitive process are respectively corresponding with time dependent mapping that the analysis of the computational process (A), modeling (B) and decisions (D) as follows:

$$pmj : < P_t, M_t, J_t > \rightarrow < A_t, B_t, D_t > \quad s.t. \begin{cases} p :< P_t, M_t, J_t, P_{t-1} > \rightarrow A_t \\ m :< P_t, M_t, J_t, M_{t-1} > \rightarrow B_t \\ j :< P_t, M_t, J_t, J_{t-1} > \rightarrow D_t \end{cases} \tag{2}$$

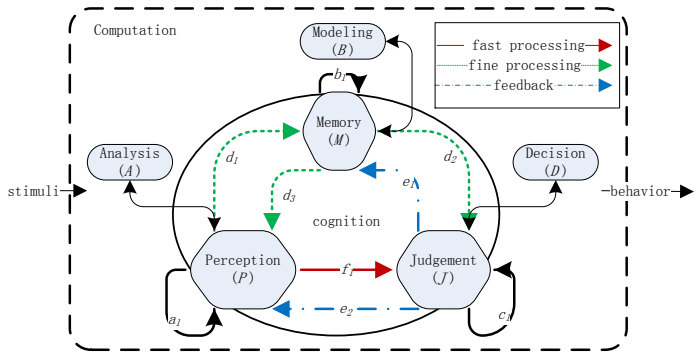

Figure 9 PMJ model

3.2.3 Cognitive architecture for media computing

Functional neuroimaging is an internal reflection of cognitive function, and it is a technique for studying the neural cognition mechanism of the mind. According to the literatures (Cieslik et al. 2013; Eickhoff et al. 2011; Fox et al. 2014) published neuroimaging database BrainMap (http://www.brainmap.org/taxonomy) which is functional and structural neuroimaging with coordinate-based, Figure 10 is the result of our visualizing analysis of 48 cognitive functions in BrainMap. On the whole, the cognitive function of the human mind can be found in hierarchy obviously.

According to the visualized analysis of cognitive function and document (Liu et al. 2016), we propose a framework of the cognitive function of the mind in Figure 11. Here, the cognitive process is mainly composed of perception pathway, motion controlled pathway, attentional controlled pathway, memory and emotion circuit, feeling and decision circuit, judgment and control circuit etc.

As Figure 12 shows that the cognitive framework for brain-inspired processing of audio-visual can be divided into four steps (Liu et al. 2016). That is, computation and simulation of cortical columns belief, computation and simulation of control information of thalamus for attention, computation and simulation of control information of limbic system for emotion, and computation and simulation of control information of spatio-temporal semantic caching of hippocampus

for memory.

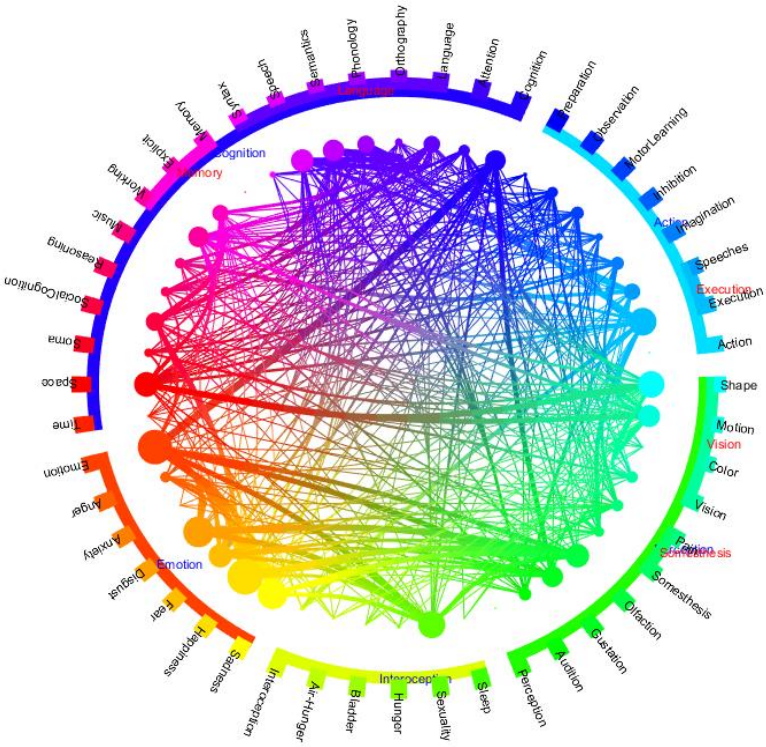

Figure 10 Visualized analysis of 48 kinds of cognitive function

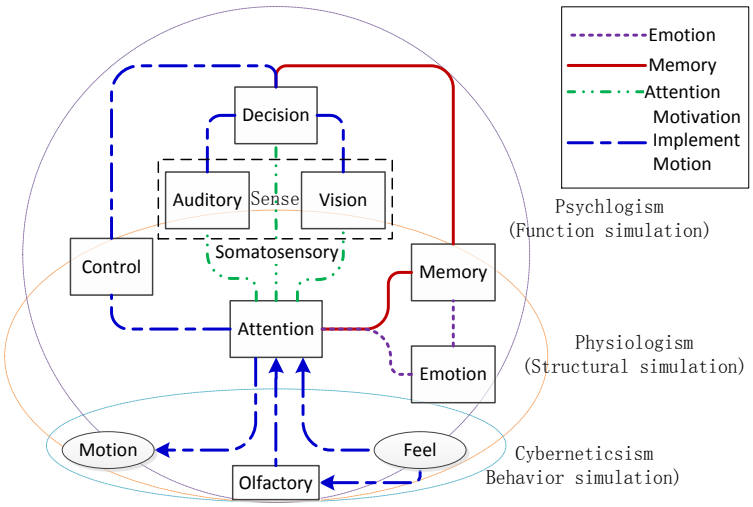

Figure 11 The cognitive framework of the mind

The whole strategy of the media information processing process is training and reinforcement layer by layer. It includes two steps pre-learning algorithm in waking (PLAW) and precisely adjust algorithm in sleeping (PAAS) as follows: 1) PLAW mimic cognitive function is controlled by emotion and memory under the waking state. It is unsupervised training and using bottom-up and to pre-process input information of temporal media A and spatial media V step by step, and generate a set of MNCC initial parameters. 2) PAAS mimics cognitive function of sleeping state when thalamus closed the input information of temporal media A and spatial media V. It is supervised training, and top-down adjusts and optimizes internal parameters with hierarchical reinforcement learning strategies under the memory and emotional control. The reward function of the limbic system is designed by the "principle of lowest

energy" and "maximizing benefit" of the system. That is, rewarding successes and punishing failure.

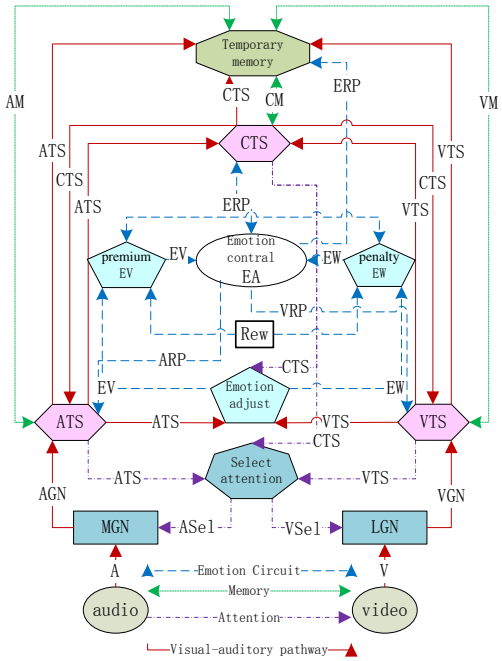

Figure 12 Cognitive architecture of media computing

3.3 The relationship between neural structure of brain and cognitive function of mind

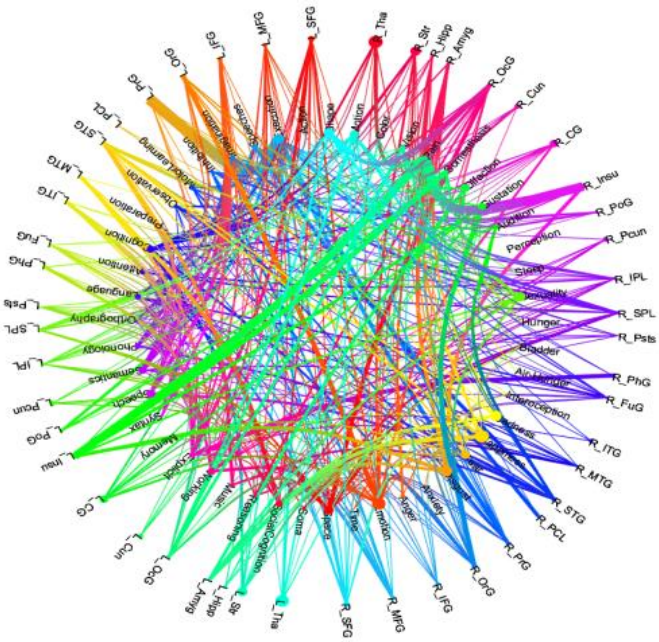

Figure 13 Visualization and analysis between 48 brain regions and 48 kinds of cognitive function

Figure 13 is our visualized analysis of the correlation between the 48 brain regions and the 48 cognitive functions in the human brain LDP database according to the literature (Fan et al. 2016b; Tzourio-Mazoyer et al. 2002). In order to find the inherent law of neurocognitive, Figure 14 is our simplification visualization of the correlation between the 14 neural areas and the 5 cognitive functions in the literature(Fan et al. 2016a; Tzourio-Mazoyer et al. 2002). It can be noted that it is essentially fully connected between the cognitive function and neural connections. Frontal lobe and basal ganglion are the centers of neural processing, and the perception and emotional are the core of cognitive function. Cognitive function is closely related to the frontal temporal lobe, the thalamus and basal ganglion are closely related to the emotion, which is the projection center of information. These results are consistent with the basic theories of

neuroscience and cognitive science.

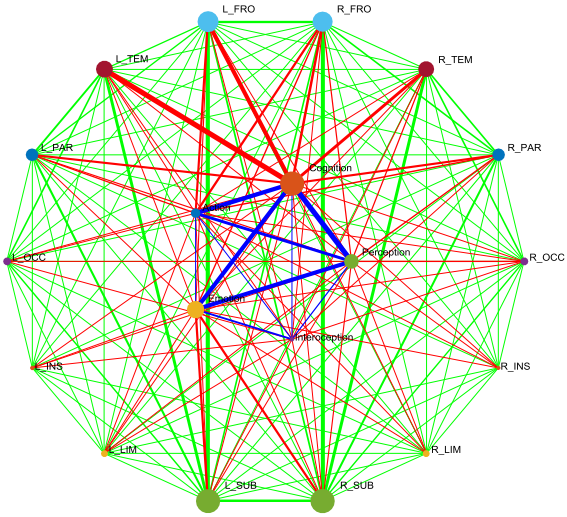

Figure 14 Simplification visualization between 14 neural areas and 5 kinds of cognitive function

The relationship between the structure of nervous system and the function of cognitive system is complex system of information control, and the relationship is unity of opposites. On the one hand, neural structure determines cognitive function; on the other hand, cognitive function also restricts neural structure. Both determine the brain's intelligent behavior.

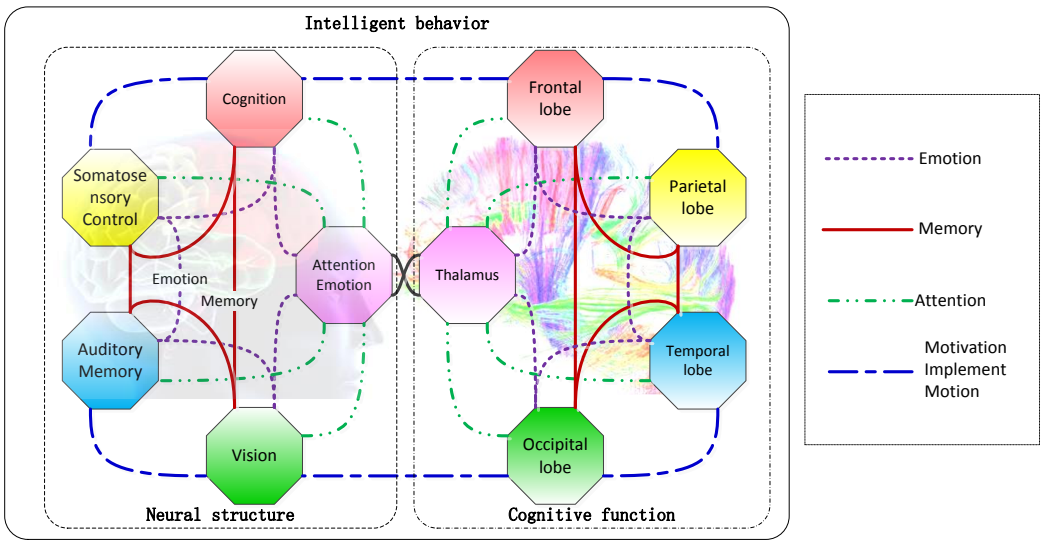

Figure 15 The relationship among neural structure, intelligent behavior and cognitive function in brain and mind

We can think that the structure of the brain nervous system and the function of the mental cognitive system constitute the "hardware" and "software" of the agent respectively, and the intelligent behavior of agents is generated by computational process. Figure 15 shows the corresponding relationship among neural structure, intelligent behavior and the cognitive function of the WMN in brain and mind. It is an isomorphic mapping between the nervous system structure of the brain and the cognitive system function of the mind. Both of them reflected the different perspectives of the intelligent behavior.

According to the relationship between intelligent behavior, brain and mind, Brain and Mind inspired Intelligence Hypothesis (BMI Hypothesis) can be proposed as follows.

Hypothesis 2 (BMI Hypothesis). It can realize the homomorphism mapping(Γ) between the structure(S) of the nervous system(N) in the brain(B), and the function(F) of the cognitive system(Ψ) in mind(M) that establishment the BMII computing model(C) of the information process(P) for intelligent(I) of the behavior(H).

$$\begin{aligned} &\Gamma: \left\langle B\left(\bigcup (S|N)\right), M\left(\bigcap (F|\Psi)\right)\right\rangle \rightarrow I\left(\sum H\right) \Big| C\left(\prod P\right) \\ &s.t. \quad \{S,N,B\} \cong \{F,\Psi,M\}, \{C,P\} \sim \{I,H\}, \ \Psi \cap N = \varnothing, \Psi \subset M, N \subset B, I \subset C. \end{aligned} \tag{3}$$

4. Design and application of CCNC framework and algorithm

We propose the following Target Classification and Recognition Hypothesis (TCR Hypothesis) based on CCNC as follows.

Hypothesis 3 (TCR Hypothesis). It can realize that the object semantics computing by BIC or BLC methods. That is, it needs to emulate the hierarchical processing, and attention mechanism of the nervous system in low-level. It also needs to imitate the framework of memory and emotion in middle-level, and simulate the function of probabilistic and causality reasoning based on the cognitive framework and integrated in high-level.

This need unified hierarchical theory in mechanism for behaviorism(or actionism), functionalism(or symbolism) and structuralism(or connectionism) (Zhong 2018). So, we constructed the 4 layers for semantics-oriented computing of BMII. Each of the layers is described as follows:

1) Layer 0 (hybrid computation layer based on mathematical model of endocrine, immune and neurochemical).

The hybrid computation layer emulates biochemical brain intelligent by Artificial Endocrine System (AES), Artificial Immune System (AIS) and NeuroChemical System (NCS) such as necrohormones, neurotransmitter and neuromodulator (or neuropeptide).

2) Layer 1 (perceptual computation layer based on control models).

The perceptual computation layer bionics realizes the cognitive function of perception and attention, which formed by the neural structure of thalamus, primary cortex of temporal lobe, parietal lobe and occipital lobe. The perceptual computation layer imitates motor brain intelligent of perceived behavioral control on archicortex.

3) Layer 2 (neural computation layer based on structural models).

The neural computation layer bionics realizes the cognitive function of memory, emotion and sensation, which formed by the neural structure of thalamus, secondary cortex of temporal lobe, parietal lobe and occipital lobe. The neural computation layer imitates emotional brain attention circuit, emotional circuit and memory circuit of the limbic system on paleocortex. The models had incremental learning based on emotion computing, reinforcement learning based on memory, deep learning such as SNN, DBN and CNN etc. al.

4) Layer 3 (cognitive computation layer based on functional models).

The cognitive computation layer bionics realizes the cognitive function of perception, inference, prediction and judgment, which formed by the neural structure of frontal lobe, association cortex of temporal lobe, parietal lobe and occipital lobe. The cognitive computation layer simulates rational brain of hierarchical ensemble learning, subjective Bayesian cognitive learning, language, and thinking control in neocortex. This method had HMM, LDA, PGM etc. al.

The semantic-oriented MNCC model research and discovers the cortex structure of the nervous system, the network structure of white matter, and cognition function of the mind, such as hierarchical processing, incremental memory, emotional reinforcement, probability ensemble and so on.

4.1 Semantic-oriented MNCC model

As Figure 16 shows, a semantic-oriented MNCC model based on the neural structure and cognitive framework were

proposed. The model is designed based on the characteristics of neural cognitive information processing such as information transmission and feedback, hierarchical, distributed and parallel processing. It extracts the semantic information from representation media by multiple steps such as a region of interest (ROI) extraction, saliency target detection, object-oriented incremental recognition, multi-scale target reinforcement, hierarchical ensemble process and other steps.

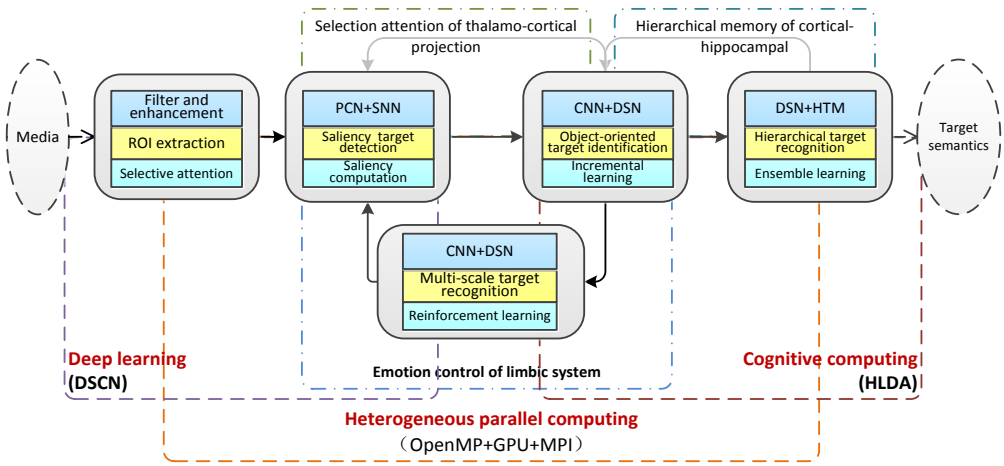

Figure 16 The semantic-oriented MNCC model

In view of the hierarchical of the natural media such as audio and video, high-level features can be achieved through the combination of low-level features. There is the hierarchy in the language text such as word, sentence, paragraph, and document. There is the hierarchy in a speech sound, for instance, sampling, phoneme, syllable, and words. Similarly, there is the hierarchy in the natural image, for example, pixel, edge, shape, texture, object and scene. The information processing of cognitive function and neural structure also had the same hierarchy from the related research of the cognitive science and neuroscience. Considering the hierarchy of neural cognitive for semantic computing, Figure 17 is the hierarchical CCNC framework based on MNCC for our further improvement.

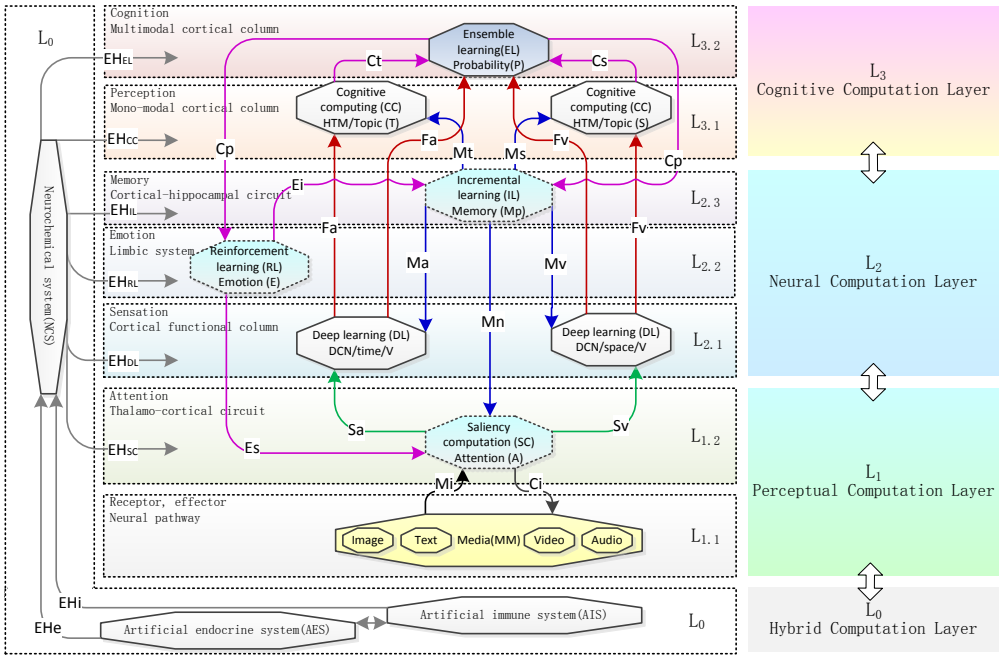

Figure 17 The hierarchical CCNC framework based on MNCC

The hierarchical CCNC framework is designed based on the Brain and Mind inspired Computing Hypothesis (BMC Hypothesis) as follows.

Hypothesis 4 (BMC Hypothesis): It can emulate low-layer perception computing process based on saliency mechanism and swarm intelligence. It can imitate the middle-layer of hierarchical feature computing process based on deep learning, reinforcement learning, and incremental learning. It also can simulate high-layer hierarchical decision process based on probability reasoning, causality reasoning, and ensemble learning.

The goal of CCNC mainly solves the problems of multimodal semantic and cross-modal computing. There are 4 layers in the hierarchical CCNC framework. It includes 7 sub-layers and 1 mixed-layer, which can realize the function of semantic computation. Each of the layers is described as follows:

L_0 Hybrid computation layer
It is designed and implements the dynamic I/O regulation according to the prior rules and inhibition and excitation mechanism of AES and AIS. It can also inhibit or excite to other layers by NCS.

L_1 Perceptual computation layer
$L_{1.1}$ It realizes pre-processing of perceptual information.
$L_{1.2}$ It imitates attention mechanism of the thalamus-cortical circuit and extracts the saliency features from the media target based on sparse representation.

L_2 Neural computation layer
$L_{2.1}$ It emulates the hierarchical structure of cortical columns, and constructs the semantic classifier based on deep learning.
$L_{2.2}$ It emulates the emotional reward and punishment mechanism of the limbic system, and realizes the function of the semantic reinforcement learning.
$L_{2.3}$ It emulates the memory mechanism of the cortex-hippocampus system and realizes the function of the incremental semantic learning.

L_3 Cognitive computation layer
$L_{3.1}$ It achieves semantic cognition computing based on the theory of mono-modal cortical column and Bayes subjective probability.
$L_{3.2}$ It achieves semantic ensemble learning of multiple classifiers based on the information integration multi-modal cortical column.

The hierarchical CCNC framework was described by following the 7-tuple <SC, EL, IL, RL, DL, CC, EH>. It is mapping processing that the CCNC framework training and recognition, which can be described as follows.

$$\begin{aligned} &\mathrm{CCNC}:\langle MM\,|\mathrm{MNCC}\rangle \rightarrow Cp \\ &s.t.\quad \mathrm{CCNC}=\langle \mathrm{SC,EL,IL,RL,DL,CC,EH}\rangle \end{aligned} \tag{4}$$

The symbols and illustration of the hierarchical CCNC framework in Figure 17 and Formula 4 are shown in Table 1.

Table 1 The symbol of CCNC framework and its implication

Symbol	Types	Implication
MM	Multidimensional matrix set	Media set, include image, audio, text, and video
Ma	Tensor	Media data
SC	The procedure of algorithms	Saliency computation
Sa	Sparse tensor	Temporal saliency feature (sparse representation)
Sv	Sparse tensor	Spatial saliency feature (sparse representation)
DL	The procedure of algorithms	Deep learning algorithm
IL	The procedure of algorithms	Incremental learning algorithm
RL	The procedure of algorithms	Reinforcement learning algorithm
EL	The procedure of algorithms	Ensemble learning algorithm
CC	The procedure of algorithms	Cognitive computing algorithm
Cp	Set	Target semantics
Ct	Vector	Features of temporal perception (probability topic)
Cs	Vector	Features of spatial perception (probability topic)
Fa	Sparse matrix	Features of temporal senses (probability distribution)
Fv	Sparse matrix	Features of spatial senses (probability distribution)
Ma	Sparse matrix	Time increment of DNN
Mv	Sparse matrix	Space increment of DNN
Mt	Vector	Time increment of cognitive topic
Ms	Vector	Space increment of cognitive topic
Mp	Vector	Feedback information of incremental learning
Mn	Vector	Attention increment of saliency computation
Es	Parameter	Reinforcement feedback of saliency computation
Ei	Parameter	Incremental feedback of memory
EH	Set	Endocrine molecules which effect on input and output
SS	Set	Semantic state of chemical solution
TS	Mapping	Reaction rule

4.2 Formal description of CCNC framework

4.2.1 Formal semantics of CCNC framework based on chemical abstract machine

The mind and brain is the physical and chemical reaction of biology. In order to analyze rationality of CCNC architecture, the CHemical Abstract Machine (CHAM) (Berry and Boudol 1992; Li et al. 2017) was employed. CHAM is a kind of description language architecture for parallel and dynamic software architecture analysis and testing. CHAM describes intelligent system architecture with molecules EH (e.g., hormones, neurotransmitters, and receptors), solution SS (e.g., state, semantic) and rules TS (e.g., knowledge, association, mapping). The CHAM molecular EH denoted factors of the chemical systems such as hormones, receptors, and transmitters, which affect the function of the physical system in the nervous system and cognitive architecture.

$EH=EH_{SC}, EH_{DL}, EH_{RL}, EH_{IL}, EH_{CC}, EH_{EL}$

The connecting elements C, processing elements TS (such as knowledge, rule, association, and mapping) and data elements D was defined as follows:

M::=TS|C◊EH|EH◊C|EH◊EH
C::=i(D)|o(D)|g(EH)|d(EH)
TS::=SC|IL|EL|RL|DL|CC
D::=Mi|Sa|Sv|Fa|Fv|Ma|Mv|Ms|Mt|Mp|Ei|Es|Cs|Ct|Cp|EH

where i(.) denoted the input, o(.) denoted the output, g(.) denoted the effects on the system input of the generation of hormones and transmitters, d(.) denoted the effects on the system output of the receptors receiving hormone and transmitter. The initial solution SS was defined as follows:

$SS = SS_{SC}//SS_{DL}//SS_{CC}//SS_{EL}//SS_{RL}//SS_{IL}$

where sub-solution is denoted as follows:

$SS_{SC} = \{|i(Mi) \lozenge i(Mn) \lozenge i(Es) \lozenge g(EH_{SC}) \lozenge SC \lozenge o(Sa) \lozenge o(Sv) \lozenge d(EH_{SC})|\}$
$SS_{DL} = \{|i(Sa) \lozenge i(Ma) \lozenge g(EH_{DL}) \lozenge DL \lozenge o(Fa) // i(Sv) \lozenge i(Mv) \lozenge DL \lozenge o(Fv) \lozenge d(EH_{DL})|\}$
$SS_{RL} = \{|i(Cp) \lozenge g(EH_{RL}) \lozenge RL \lozenge o(Ei) \lozenge o(Es) \lozenge d(EH_{RL})|\}$
$SS_{IL} = \{|i(Ei) \lozenge i(Cp) \lozenge g(EH_{IL}) \lozenge IL \lozenge o(Mp) \lozenge o(Ma) \lozenge o(Mv) \lozenge o(Mt) \lozenge o(Ms) \lozenge d(EH_{IL})|\}$
$SS_{CC} = \{|i(Fa) \lozenge i(Mt) \lozenge g(EH_{CC}) \lozenge CC \lozenge o(Ct) \lozenge d(EH_{CC}) // i(Fv) \lozenge i(Ms) \lozenge g(EH_{CC}) \lozenge CC \lozenge o(Cs) \lozenge d(EH_{CC})|\}$
$SS_{EL} = \{|i(Ct) \lozenge i(Cs) \lozenge i(Fa) \lozenge i(Fv) \lozenge g(EH_{EL}) \lozenge EL \lozenge o(Cp) \lozenge d(EH_{EL})|\}$

The intermediate solution SM after the reaction was defined as follows:

$SM = SM_{SC} // SM_{DL} // SM_{CC} // SM_{EL} // SM_{RL} // SM_{IL}$

where the sub-solution is denoted as follows:

$SM_{SC} = \{|SC \lozenge i(Mi) \lozenge i(Mn) \lozenge i(Es) \lozenge g(EH_{SC}) \lozenge o(Sa) \lozenge o(Sv) \lozenge d(EH_{SC})|\}$
$SM_{DL} = \{|DL \lozenge i(Sa) \lozenge i(Ma) \lozenge g(EH_{DL}) \lozenge o(Fa) // DL \lozenge i(Sv) \lozenge i(Mv) \lozenge o(Fv) \lozenge d(EH_{DL})|\}$
$SM_{RL} = \{|RL \lozenge i(Cp) \lozenge g(EH_{RL}) \lozenge o(Ei) \lozenge o(Es) \lozenge d(EH_{RL})|\}$
$SM_{IL} = \{|IL \lozenge i(Ei) \lozenge i(Cp) \lozenge g(EH_{IL}) \lozenge o(Mp) \lozenge o(Ma) \lozenge o(Mv) \lozenge o(Mt) \lozenge o(Ms) \lozenge d(EH_{IL})|\}$
$SM_{CC} = \{|CC \lozenge i(Fa) \lozenge i(Mt) \lozenge g(EH_{CC}) \lozenge o(Ct) \lozenge d(EH_{CC}) // CC \lozenge i(Fv) \lozenge i(Ms) \lozenge g(EH_{CC}) \lozenge o(Cs) \lozenge d(EH_{CC})|\}$
$SM_{EL} = \{EL \lozenge | i(Ct) \lozenge i(Cs) \lozenge i(Fa) \lozenge i(Fv) \lozenge g(EH_{EL}) \lozenge o(Cp) \lozenge d(EH_{EL})|\}$

The six important basic rules for the solution reaction (state transition) were defined as follows:

$TS_{SC} \equiv i(Mi) \lozenge i(Mn) \lozenge i(Es) \lozenge g(EH_{SC}) \lozenge SC, o(Sa) \lozenge o(Sv) \lozenge d(EH_{SC}) \lozenge SC \rightarrow SC \lozenge i(Mi) \lozenge i(Mn) \lozenge i(Es) \lozenge g(EH_{SC}), SC \lozenge o(Sa) \lozenge o(Sv) \lozenge d(EH_{SC})$

$TS_{DL} \equiv i(Sa) \lozenge i(Ma) \lozenge g(EH_{DL}) \lozenge DL, o(Fa) \lozenge d(EH_{DL}) \lozenge DL, i(Sv) \lozenge i(Mv) \lozenge g(EH_{DL}) \lozenge DL, o(Fv) \lozenge d(EH_{DL}) \lozenge DL \rightarrow DL \lozenge i(Sa) \lozenge i(Ma) \lozenge g(EH_{DL}), DL \lozenge o(Fa) \lozenge d(EH_{DL}), DL \lozenge i(Sv) \lozenge i(Mv) \lozenge g(EH_{DL}), DL \lozenge o(Fv) \lozenge d(EH_{DL})$

$TS_{RL} \equiv i(Cp) \lozenge g(EH_{RL}) \lozenge RL, o(Ei) \lozenge o(Es) \lozenge d(EH_{RL}) \lozenge RL \rightarrow RL \lozenge i(Cp) \lozenge g(EH_{RL}), RL \lozenge o(Ei) \lozenge o(Es) \lozenge d(EH_{RL})$

$TS_{IL} \equiv i(Ei) \lozenge i(Cp) \lozenge g(EH_{IL}) \lozenge IL, o(Mp) \lozenge o(Ma) \lozenge o(Mv) \lozenge o(Mt) \lozenge o(Ms) \lozenge d(EH_{IL}) \lozenge IL \rightarrow IL \lozenge i(Ei) \lozenge i(Cp) \lozenge g(EH_{IL}), IL \lozenge o(Mp) \lozenge o(Ma) \lozenge o(Mv) \lozenge o(Mt) \lozenge o(Ms) \lozenge d(EH_{IL})$

$TS_{CC} \equiv i(Fa) \lozenge i(Mt) \lozenge g(EH_{CC}) \lozenge CC, o(Ct) \lozenge d(EH_{CC}) \lozenge CC, i(Fv) \lozenge i(Ms) \lozenge g(EH_{CC}) \lozenge CC, o(Cs) \lozenge d(EH_{CC}) \lozenge CC \rightarrow CC \lozenge i(Fa) \lozenge i(Mt) \lozenge g(EH_{CC}), CC \lozenge o(Ct) \lozenge d(EH_{CC}), CC \lozenge i(Fv) \lozenge i(Ms) \lozenge g(EH_{CC}), CC \lozenge o(Cs) \lozenge d(EH_{CC})$

$TS_{EL} \equiv i(Ct) \lozenge i(Cs) \lozenge i(Fa) \lozenge i(Fv) \lozenge g(EH_{EL}) \lozenge EL, o(Cp) \lozenge d(EH_{EL}) \lozenge EL \rightarrow EL \lozenge i(Ct) \lozenge i(Cs) \lozenge i(Fa) \lozenge i(Fv) \lozenge g(EH_{EL}), EL \lozenge o(Cp) \lozenge d(EH_{EL})$

The rules TS_{SC} denoted the saliency computation of the attention mechanism in thalamic-cortical circuits.

Thalamic-cortical projection is an important infrastructure of brain function, and the thalamus plays an important role in the attention mechanism. Selective attention can reduce the influence of curse of dimensionality by saliency mechanism. In order to realize the saliency computation, this process focuses on the attention mechanism of the thalamic-cortical circuit and establishes the scheme of the saliency feature extraction. This rule mapping between the media *MM* and the spatial-temporal saliency features <*Sa, Sv*> was indicated as follows.

$$\begin{aligned} &\mathrm{SC}: MM \rightarrow \langle Sa, Sv \rangle \\ &s.t. \quad \langle Sa, Sv \rangle = \prod_{\langle Mn, Es \rangle} \sigma_{Mn}(MM) \end{aligned} \tag{5}$$

The rules TS_{DL} denotes the senses feature learning based on the hierarchical structure of the cortex. A cortical column is the basic unit of cognitive function. The cortex cognitive function is deep learning algorithm research basis and inspires how to realize the target classification and recognition. We can emulate the processing mechanism of the multi-layers architecture of the cortical column, and design the hierarchical semantic classifier. The probability distribution of the spatial-temporal senses features<*Fa,Fv*> was computed with media objects saliency features as follows:

$$\begin{aligned} &\mathrm{DL}: \{\langle Sa, Ma \rangle \langle Sv, Mv \rangle\} \rightarrow \langle Fa; Fv \rangle \\ &s.t. \quad \mathrm{DL} = F_{\mathrm{n}}\left(F_{\mathrm{n-1}}\left(F_{\mathrm{n-2}}\left(, \cdots, F_2\left(F_1(x)\right), \cdots,\right)\right)\right) \end{aligned} \tag{6}$$

The rules TS_{CC} denoted perceptual features computation based on probabilistic cognition. The computation process of the perceptual feature is building the mapping between Bayesian probability distribution of spatial-temporal senses features <*Fa,Fv*> and spatial-temporal perceptual features <*Ct,Cs*>.

$$\begin{aligned} &\mathrm{CC}: \{\langle Fa, Mt \rangle; \langle Fv, Ms \rangle\} \rightarrow \{Ct; Cs\} \\ &s.t. \quad \underset{\{Ct;Cs\}}{argmax}\, P\left(\{Ct; Cs\} \middle| \{\langle Fa, Mt \rangle; \langle Fv, Ms \rangle\}\right) = \frac{P\left(\{\langle Fa, Mt \rangle; \langle Fv, Ms \rangle\} \middle| \{Ct; Cs\}\right) P\left(\{Ct; Cs\}\right)}{P\left(\{\langle Fa, Mt \rangle; \langle Fv, Ms \rangle\}\right)} \end{aligned} \tag{7}$$

The rules TS_{EL} denoted target recognition based on multi-modal perception integration. It realizes the Ensemble Learning (EL) of multi-modal perception information and the final decision making of target semantic recognition. The core mission of target recognition is to establish the mapping between spatial-temporal senses-perceptual features <*Ct, Cs, Fa, Cp, Fv*> and target semantic labels as follows.

$$\begin{aligned} &\mathrm{EL}: \langle Cs, Ct, Fv, Fa | \mathrm{DL}, \mathrm{CC} \rangle \rightarrow Cp \\ &s.t. \quad Cp = sign\left(\sum_m w_m f_m\left(\langle Cs, Ct, Fv, Fa | \mathrm{DL}, \mathrm{CC} \rangle\right)\right) \end{aligned} \tag{8}$$

The rules TS_{RL} denoted the reward and punishment of emotion in the limbic system. It is the Reinforcement Learning (RL) basis that the emotions control of reward and punishment in the limbic system. The aim of simulating emotion control of rewards and punishment is to establish a stable and optimal target semantic. This rule solves errors minimization paradigm between the target semantic expectation *Cp* and the saliency feedback (*Ei* and *Es*) was defined as follows.

$$\underset{\mathrm{RL}}{arg\,Min}^{\|\mathrm{RL}\|}\left(\left\|Cp_L - \overline{Cp}\right\|\right) \qquad s.t. \quad \mathrm{RL}: \langle Cp \,|\, \mathrm{CC} \rangle \rightarrow \langle Ei, Es \rangle \tag{9}$$

The rules TS_{IL} denoted the control of the memory system. The essence of semantic mapping is the memory and prediction for the spatial-temporal pattern. The material base for intelligent prediction includes the memory processing architecture of cortex-hippocampus circuits and its spatial-temporal pattern. This rule imitated mechanism of memory control, and storage and prediction of the historical information. The rules employed Incremental Learning (IL) method to control incremental knowledge. It includes the incremental of DNN's spatial-temporal features <*Mt,Ms*>, the incremental of cognitive topic spatial-temporal features <*Mt,Ms*>, and memory feedback *Mp* of incremental learning.

$$\begin{aligned} &\mathrm{IL}:\left\langle Ei, Cp \middle| \mathrm{DL}, \mathrm{CC}\right\rangle \rightarrow \left\langle Mp, Ma, Mv, Mt, Ms, Mn\right\rangle \\ &s.t. \quad M_t = \frac{\alpha M_{t-1} Ei}{1+sgn(\Delta t)exp(\gamma \Delta t sgn(\Delta t))} + \beta Cp, \qquad M_t = Mp_t, Ma_t, Mv_t, Mt_t, Ms_t, Mn_t \end{aligned} \tag{10}$$

4.2.2 Description and analysis for semantic learning and recognition of hierarchical CCNC framework

The dynamic process of hierarchical CCNC framework learning includes the following 8 steps as follows:

1: It achieves spatial-temporal saliency features computation based on SNN according to the rules of TS_{SC}.
SS_{SC} // SS_{DL} // SS_{CC} // SS_{EL} // SS_{RL} // SS_{IL} → SM_{SC} // SS_{DL} // SS_{CC} // SS_{EL} // SS_{RL} // SS_{IL}

2: It achieves target semantic learning of hierarchically integrated cognition based on deep learning and cognitive computing, including three dynamic processes as follows:

3: It realizes spatial-temporal senses features computation of DNN according to the rules of TS_{DL}.
SM_{SC} // SS_{DL} // SS_{CC} // SS_{EL} // SS_{RL} // SS_{IL} → SM_{SC} //SM_{DL} // SS_{CC} // SS_{EL} // SS_{RL} // SS_{IL}

4: It realizes spatial-temporal perception features computation of hierarchical topic model according to the rules of TS_{CC}.
SM_{SC} // SM_{DL} // SS_{CC} // SS_{EL} // SS_{RL} // SS_{IL} → SM_{SC} // SM_{DL} // SM_{CC} // SS_{EL} // SS_{RL} // SS_{IL}

5: It realizes ensemble learning of objects semantic labels based on ensemble learning (such as AdaBoost et.al.) according to the rules of TS_{EL}.
SM_{SC} // SM_{DL} // SM_{CC} // SS_{EL} // SS_{RL} // SS_{IL} → SM_{SC} // SM_{DL} // SM_{CC} // SM_{EL} // SS_{RL} // SS_{IL}

6: It achieves incremental computation and feedback of reinforcement learning based on object-oriented and multi-scale, including two dynamic processes as follows:

7: It realizes multi-scale feedback computation of hierarchy reinforcement learning according to the rules of TS_{RL}.
SM_{SC} // SM_{DL} // SM_{CC} // SM_{EL} // SS_{RL} // SS_{IL} → SM_{SC} // SM_{DL} // SM_{CC} // SM_{EL} // SM_{RL} // SS_{IL}

8: It realizes the temporal-spatial computation of object-oriented target based on online incremental learning according to the rules of TS_{IL}.
SM_{SC} // SM_{DL} // SM_{CC} // SM_{EL} // SM_{RL} // SS_{IL} → SM_{SC} // SM_{DL} // SM_{CC} // SM_{EL} // SM_{RL} // SM_{IL}

The dynamic process of semantic recognition based on hierarchical CCNC framework learning includes the following 5 steps as follows:

1: It achieves the saliency feature computation of sparse representation of SNN.
SS_{SC} // SS_{DL} // SS_{CC} // SS_{EL} // SM_{RL} // SM_{IL} → SM_{SC} // SS_{DL} // SS_{CC} // SS_{EL} // SM_{RL} // SM_{IL}

2: It achieves target recognition of hierarchically integrated cognition based on deep learning and cognitive computing, including three processes as follows:

3: It realizes spatial-temporal senses feature computation of DNN according to the rules of TS_{DL}.
SM_{SC} // SS_{DL} // SS_{CC} // SS_{EL} // SM_{RL} // SM_{IL} → SM_{SC} // SM_{DL} // SS_{CC} // SS_{EL} // SM_{RL} // SM_{IL}

4: It realizes spatial-temporal perception features computation of hierarchical topic model according to the rules of TS_{CC}.
SM_{SC} // SM_{DL} // SS_{CC} // SS_{EL} // SM_{RL} // SM_{IL} → SM_{SC} // SM_{DL} // SM_{CC} // SS_{EL} // SM_{RL} // SM_{IL}

5: It realizes ensemble computation of objects semantic labels based on ensemble learning (such as AdaBoost et.al.) according to the rules of TS_{EL}
SM_{SC} // SM_{DL} // SM_{CC} // SS_{EL} // SM_{RL} // SM_{IL} → SM_{SC} // $SM_{D}L$ // SM_{CC}// SM_{EL} // SM_{RL} // SM_{IL}

4.3 Engineering applications of MNCC model and CCNC framework

A wide range of applications of semantic-oriented MNCC model and hierarchical CCNC framework would be identified such as unmanned autonomous system and search engines of cross-media intelligent(Liu et al. 2015b). It would have profound significance for the exploration and the realization of the BIC and BLC. With the development of software defining satellite, on-board software urgently needs high productivity computing to solve the problem of remote sensing intelligent information extraction. CCNC framework can provide high productivity intelligent algorithms and tools for remote sensing information extraction.

As Figure 18 shows, MNCC model and CCNC framework had been applied to the algorithms of scene classification, target detection and target recognition of high-resolution remote sensing images (Liu and Zheng 2017). The experimental result of scene classification, target detection and target recognition based on CCNC framework and MNCC model is shown in Table 2.

The Average Precision (AP) of scene classification algorithm based on MNCC model is up to 84.73% on High-resolution Satellite Scene (HRSS) dataset of Wuhan University and reaches 88.26% on University of California Merced Land Use (UCMLU) dataset. For target detection algorithm based on MNCC model on High-resolution Remote Sensing Harbor Target Detection (HRSHTD) dataset, the average Probability of Detection (PD) is 91.63%, False Alarm Rate (FAR) is 8.37%, and Missed Detection Rate (MDR) is 9.35%. The experimental results show that AP and Overall Accuracy (OA) of target classification algorithm based on CCNC framework are 96.93% and 97.00% on High-resolution Ship Target Classification and Recognition (HSTCR) dataset, respectively (Liu and Zheng 2017). It also reaches 99.90% and 99.88% on Moving and Stationary Target Acquisition and Recognition (MSTAR) dataset,

respectively. It shows that the CCNC framework can address the problem of semantic learning on remote sensing image, which is small and complex ground objects.

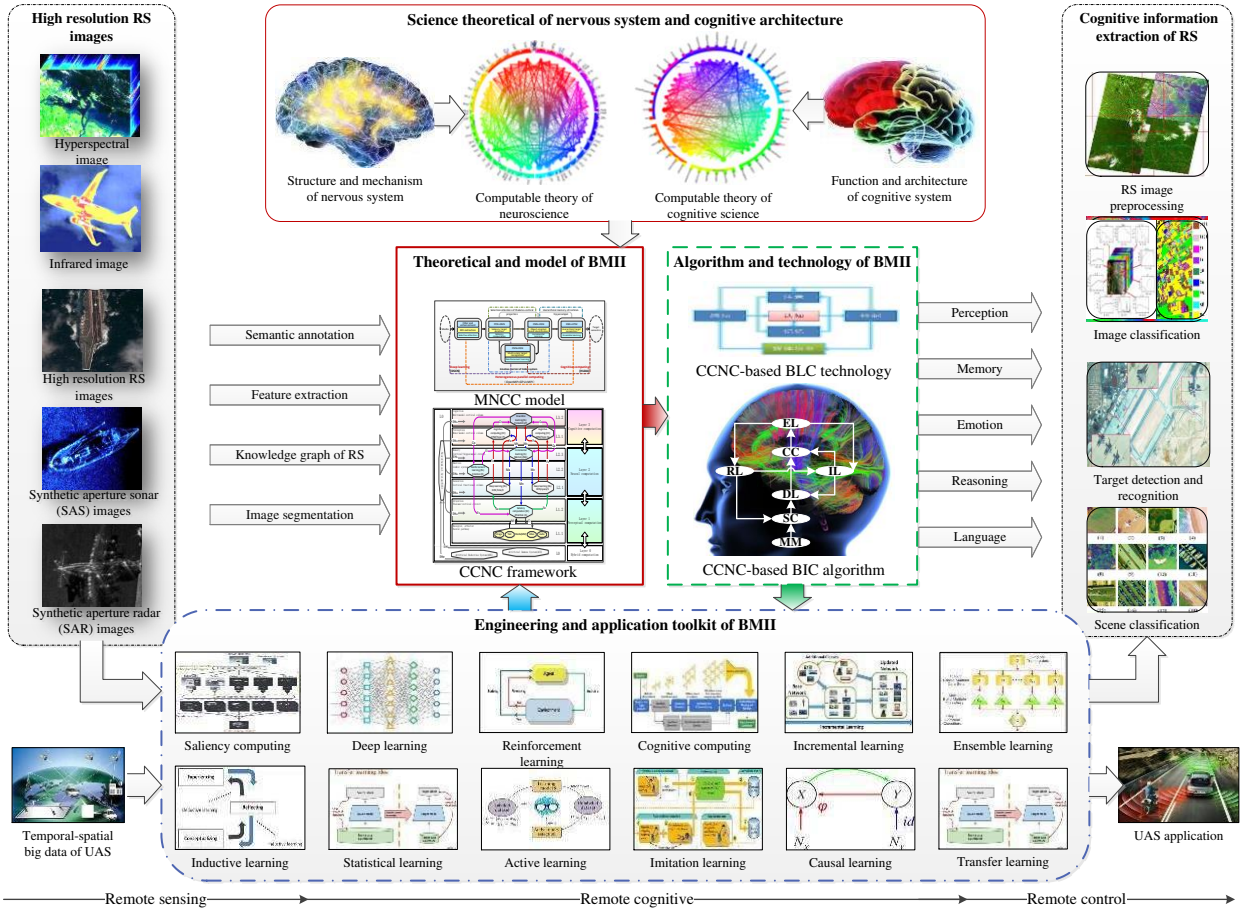

Figure 18 The engineering application of the MNCC model and CCNC framework for information extraction of remote sensing and target recognition of unmanned autonomous system

Table 2 The symbol of CCNC framework and its implication

Sematic recognition tasks	Datasets	Model/Methods	AP (%)	OA (%)	PD (%)	FAR (%)	MDR (%)
Scene classification (Liu et al. 2015a)	HRSS	MNCC/SC-MNCC	84.73				
Scene classification (Liu et al. 2015a)	UCMLU	MNCC/SC-MNCC	88.26				
Target detection (Liu et al. 2017)	HRSHTD	MNCC/SLS-CNN			95.00	8.00	5.00
Ship detection (Liu et al. 2018b)	SAR	CCNC/SD-SNN			91.63	9.48	11.02
Tank recognition (Liu and Zheng 2017)	MSTAR	CCNC/TCR-EL-DHMM	99.90	99.88			
Target recognition (Liu and Zheng 2017)	HSTCR	CCNC/TCR-IREL-OOMS	97.00	96.93			

5. Conclusion

Aiming at scientific problems of BMII modeling, the cortical models and human brain WMN in the nervous system had been analyzed in this paper. Then hierarchy characteristic of architecture and function in the cognitive system had been explored. The relationship between nervous system and cognitive framework for BMII had also summarized. The hierarchical CCNC framework is proposed based on the MNCC model. The formal analysis of the rationality, semantic learning and recognition algorithm are given for hierarchical CCNC framework by CHAM. Looking to the future, it can be applied to the cross-modal intelligence applications, to realize the state-of-the-art applications based on semantic CCNC framework are the next step.

Funding This work is supported by National Natural Science Foundation of China (No. 62176087) , Shenzhen Special Foundation of Central Government to Guide Local Science & Technology Development (No. 2021Szvup032) , Postgraduate Education Reform and Quality Province Improvement Project of Henan Province (No. YJS2022JC33), and Education Reform Research and Practice Project of Henan University (No. HDXJJG2020-109).

Data availability No data are available.

Declarations

Conflict of interest The authors declare that they have no conflicts of interest.
Ethical approval The paper does not deal with any ethical issues.
Informed consent The authors declare that all authors have informed consent.

References

Berry G, Boudol G (1992) The chemical abstract machine Theoretical Computer Science 96:217-248 doi:10.1016/0304-3975(92)90185-I

Chen Y et al. (2018) Neuromorphic computing's yesterday, today, and tomorrow – an evolutional view Integration 61:49-61 doi:10.1016/j.vlsi.2017.11.001

Cieslik EC et al. (2013) Is there "one" DLPFC in cognitive action control? Evidence for heterogeneity from co-activation-based parcellation Cerebral Cortex 23:2677-2689 doi:10.1093/cercor/bhs256

Creswell A, White T, Dumoulin V, Arulkumaran K, Sengupta B, Bharath AA (2018) Generative Adversarial Networks: An Overview IEEE Signal Processing Magazine 35:53-65 doi:10.1109/MSP.2017.2765202

CU S (2010) The triune brain in antiquity: Plato, Aristotle, Erasistratus Journal of the history of the neurosciences 1:1-14 doi:10.1080/09647040802601605

DeBole MV et al. (2019) TrueNorth: Accelerating From Zero to 64 Million Neurons in 10 Years Computer 52:20-29 doi:10.1109/MC.2019.2903009

Eickhoff SB, Bzdok D, Laird AR, Roski C, Caspers S, Zilles K, Fox PT (2011) Co-activation patterns distinguish cortical modules, their connectivity and functional differentiation Neuroimage 57:938-949 doi:10.1016/j.neuroimage.2011.05.021

Eliasmith C, Stewart TC, Choo X, Bekolay T, DeWolf T, Tang C, Rasmussen D (2012) A large-scale model of the functioning brain Science 338:1202-1205 doi:10.1126/science.1225266

Fan L et al. (2016a) The Human Brainnetome Atlas: A New Brain Atlas Based on Connectional Architecture Cerebral Cortex

Fan L et al. (2016b) The Human Brainnetome Atlas: A New Brain Atlas Based on Connectional Architecture Cerebral Cortex 26:3508-3526 doi:10.1093/cercor/bhw157

Fox PT, Lancaster JL, Laird AR, Eickhoff SB (2014) Meta-analysis in human neuroimaging: computational modeling of large-scale databases Neuroscience 37:409-434 doi:10.1146/annurev-neuro-062012-170320

Fu X et al. (2014a) A computational cognition model of perception, memory, and judgment Science China-Information Sciences 57 doi:032114
10.1007/s11432-013-4911-9

Fu X et al. (2014b) A computational cognition model of perception, memory, and judgment Science China-Information Sciences 57:1-15 doi:10.1007/s11432-013-4911-9

George D, Hawkins J (2009) Towards a Mathematical Theory of Cortical Micro-circuits Plos Computational Biology 5 doi:e1000532
10.1371/journal.pcbi.1000532

Joseph R (2000) Neuropsychiatry, Neuropsychology, Clinical Neuroscience.

Jouppi NP, Young C, Patil N, Patterson D (2018) Motivation for and Evaluation of the First Tensor Processing Unit IEEE Micro 38:10-19 doi:10.1109/MM.2018.032271057

Li X et al. (2017) A New Method to Construct the Software Vulnerability Model. Paper presented at the 2017 2nd IEEE International Conference on Computational Intelligence and Applications (ICCIA), Beijing,

Liu Y, Cai K, Liu C, Zheng F-b (2018a) CSRNCVA: A model of cross-media semantic retrieval based on neural computing of visual and auditory sensations Neural Network World 28:305-323 doi:10.14311/NNW.2018.28.018

Liu Y, Cai K, Zhang M-h, Zheng F-b (2018b) Target detection in remote sensing image based on saliency computation of spiking neural network. Paper presented at the 38th Annual IEEE International Geoscience and Remote Sensing Symposium, IGARSS 2018, July 22, 2018 - July 27, 2018, Valencia, Spain, 22-27 July 2018

Liu Y, Fu Z-y, Zheng F-b (2015a) Scene classification of high-resolution remote sensing image based on multimedia neural cognitive computing Systems Engineering and Electronics 37:2623-2633 doi:10.3969/j.issn.1001-506X.2015.11.31

Liu Y, Tu C-l, Zheng F-b (2015b) Research of Neural Cognitive Computing Model for Visual and Auditory Cross-media Retrieval Computer Science 42:19-25,30 doi:10.11896/j.issn.1002-137X.2015.3.004

Liu Y, Yang W, Zheng F-b (2014) Cognitive Neural Mechanisms and Saliency Computational Model of Visual Selective Attention Journal of Chinese Computer Systems 35:584-589 doi:10.3969/j.issn.1000-1220.2014.03.029

Liu Y, Zhang M-h, Xu P, Guo Z-w (2017) SAR ship detection using sea-land segmentation-based convolutional neural network. Paper presented at the 2017 International Workshop on Remote Sensing with Intelligent Processing, RSIP 2017, May 19, 2017 - May 21, 2017, Shanghai, China,

Liu Y, Zhang M-h, Zheng F-b (2013) Cognitive Neural Mechanisms and Saliency Computational Model of Auditory Selective Attention Computer Science 40:283-287 doi:10.3969/j.issn.1002-137X.2013.06.063

Liu Y, Zheng F-b (2017) Object-oriented and multi-scale target classification and recognition based on hierarchical ensemble learning Computers & Electrical Engineering 62:538-554 doi:10.1016/j.compeleceng.2016.12.026

Liu Y, Zheng F-b, Zuo X-y (2016) CSMCCVA: Framework of cross-modal semantic mapping based on cognitive computing of visual and auditory sensations High Technology Letters 22:90-98 doi:10.3772/j.issn.1006-6748.2016.01.013

Luo T et al. (2017) DaDianNao: A Neural Network Supercomputer Ieee Transactions on Computers 66:73-88 doi:10.1109/tc.2016.2574353

Ma D et al. (2017) Darwin: A neuromorphic hardware co-processor based on spiking neural networks Journal Of Systems Architecture 77:43-51 doi:10.1016/j.sysarc.2017.01.003

Mead C (1990) Neuromorphic electronic systems. Paper presented at the Proceedings of the IEEE,

Mnih V et al. (2015) Human-level control through deep reinforcement learning Nature 518:529-533 doi:10.1038/nature14236

Modha DS, Ananthanarayanan R, Esser SK, Ndirango A, Sherbondy AJ, Singh R (2011) Cognitive Computing Commun ACM 54:62-71 doi:10.1145/1978542.1978559

Ng G-W (2009) Brain-mind machinery: Brain-inspired computing and mind opening. doi:10.1142/9789812790262_fmatter

Paul A M (2014) Artificial brains. A million spiking-neuron integrated circuit with a scalable communication network and interface Science 6197:668-673 doi:10.1126/science.1254642

Pei J et al. (2019) Towards artificial general intelligence with hybrid Tianjic chip architecture Nature 572:106-111 doi:10.1038/s41586-019-1424-8

Piccinini G (2004) The First Computational Theory of Mind and Brain: A Close Look at Mcculloch and Pitts's "Logical Calculus of Ideas Immanent in Nervous Activity" Synthese 141:175-215 doi:10.1023/B:SYNT.0000043018.52445.3e

Pogliano C (2017) Lucky Triune Brain Chronicles of Paul D-MacLean's Neuro-Catchword Nuncius-Journal of the History of Science 32:330-375 doi:10.1163/18253911-03202004

Roy K, Jaiswal A, Panda P (2019) Towards spike-based machine intelligence with neuromorphic computing Nature 575:607-617 doi:10.1038/s41586-019-1677-2

Sabour S, Frosst N, Hinton GE (2017) Dynamic Routing Between Capsules. Paper presented at the neural information processing systems,

Silver D et al. (2016) Mastering the game of Go with deep neural networks and tree search Nature 529:484-489 doi:10.1038/nature16961

Tom B. Brown BM, Nick Ryder, Melanie Subbiah, Jared Kaplan, Prafulla Dhariwal, Arvind Neelakantan, Pranav Shyam, Girish Sastry, Amanda Askell, Sandhini Agarwal, Ariel Herbert-Voss, Gretchen Krueger, Tom Henighan, Rewon Child, Aditya Ramesh, Daniel M. Ziegler, Jeffrey Wu, Clemens Winter, Christopher Hesse, Mark Chen, Eric Sigler, Mateusz Litwin, Scott Gray, Benjamin Chess, Jack Clark, Christopher Berner, Sam McCandlish, Alec Radford, Ilya Sutskever, Dario Amodei (2020) Language Models are Few-Shot Learners. Paper presented at the Thirty-fourth Conference on Neural Information Processing Systems (NeurIPS 2020), Virtual-only Conference, December 6-12

Tzourio-Mazoyer N et al. (2002) Automated anatomical labeling of activations in SPM using a macroscopic anatomical parcellation of the MNI MRI single-subject brain Neuroimage 15:273-289 doi:10.1006/nimg.2001.0978

Valladares AA, Gonzalez JG, Gomez CM (2017) Event related potentials changes associated with the processing of auditory valid and invalid targets as a function of previous trial validity in a Posner's paradigm Neuroscience Research 115:37-43 doi:10.1016/j.neures.2016.09.006

Wu Z, Pan S, Chen F, Long G, Zhang C, Yu PS (2020) A Comprehensive Survey on Graph Neural Networks IEEE Transactions on Neural Networks and Learning Systems:1-21 doi:10.1109/TNNLS.2020.2978386

ZENG Y, LIU C-L, TAN T-N (2016) Retrospect and Outlook of Brain-Inspired Intelligence Research Chinese Journal of Computers 39:212-222 doi:10.11897/SP.J.1016.2016.00212

Zhong Y (2018) Mechanism-based artificial intelligence theory: a universal theory of artifical intelligence CAAI Transactions on Intelligent Systems 13:2-18 doi:10.11992/tis.201711032

Zhou ER, Fang L, Liu RL, Tang ZS (2017) An improved memristor model for brain-inspired computing Chinese Physics B 26:537-543 doi:10.1088/1674-1056/26/11/118502

Yang Liu received the B.S. degree in industrial analysis and electronic measurement from Changchun University of Science and Technology in 1996, and the M.S. degree in applied mathematics and Ph.D. degree in remote sensing information science and technology from Henan University in 2009 and 2016, respectively. He is currently a Professor in college of computer science and information engineering of Henan University. He is the director of Henan Province Engineering Research Center of Spatial Information Processing, and Principle Investigator of brain-inspired intelligence innovative science and technology team. His research interests include science theory and technology of brain and mind inspired computing, and engineering and application of complex system for spatiotemporal big data.

Jianshe Wei is Distinguished Professor, Yellow River scholar and doctoral supervisor of School of Life Sciences, as Principle Investigator of Institute for Brain Sciences Research in Henan University. He received Medicine Degree from Xinxiang Medical College in 1993 and Ph.D. degree from Fudan University in 2002. He worked as a postdoctoral researcher at the University of Calgary, the Tokyo Metropolitan Institute for Neuroscience and New York State Institute for Basic Research in Developmental Disabilities from 2003 to 2010. The main research direction focuses the basic problems of neurodegenerative diseases in Parkinson's disease by molecular pathology and biophysical methods. At present, it is mainly engaged in the basic research of neural circuit and synaptic plasticity in affective disorders.