Joint of Modeling Techniques and Life Cycle Assessment for Prediction of Yield, Economic Profit, and Global Warming Potential for Wheat Farms

Hassan Ghasemi-Mobtaker
University of Tehran

Ali Kaab (kaab.ali@ut.ac.ir)
Tehran University: University of Tehran https://orcid.org/0000-0002-6334-5255

Shahin Rafiee
Tehran University: University of Tehran

Research Article

Keywords: Energy, Economic analysis, Global warming, Modeling, Wheat

Posted Date: March 15th, 2021

DOI: https://doi.org/10.21203/rs.3.rs-174760/v1

Title

Joint of modeling techniques and life cycle assessment for prediction of yield, economic profit, and global warming potential for wheat farms

Authors

Hassan Ghasemi-Mobtaker[1,*], Ali Kaab[1,**], Shahin Rafiee[1]

Affiliation

1-Department of Agricultural Machinery Engineering, Faculty of Agricultural Engineering and Technology, University of Tehran, Karaj, Iran

* Corresponding authors:

Hassan Ghasemi-Mobtaker (mobtaker@ut.ac.ir)

Ali Kaab (kaab.ali@ut.ac.ir)

Complete Postal Address:

Department of Agricultural Machinery Engineering, Faculty of Agricultural Engineering and Technology, University of Tehran, Karaj, Iran

Tel: +98 26 32808138

Fax: +98 2612808138

Joint of modeling techniques and life cycle assessment for prediction of yield, economic profit, and global warming potential for wheat farms

Abstract

Forecasting crop yield and its environmental effects can help increase agricultural energy efficiency and reduce environmental impacts. This study provides mathematical, adaptive network-based fuzzy inference system (ANFIS) and neural networks (ANNs) techniques for forecast yield, economic profit, and global warming of wheat production. For this purpose, 75 wheat farms located in the central area of Hamadan province were selected randomly and data were gathered through oral interview. Then, computed the input and output energy, life cycle assessment (LCA) was utilized to specify the environmental effects of wheat cultivation. The calculations displayed that the averages of inputs and outputs energy were about 43055 MJ ha^{-1} and 117407 MJ ha^{-1}, respectively. The LCA results demonstrated that wheat cultivation cause to the emissions of 624.29 kg $CO_{2\ eq.}$ ton^{-1}. ANN structures for predicting yield, economic profit and global warming in wheat production with two hidden layers were the best topologies. ANFIS model results indicated that in the 3-level ANFIS model, the highest R^2 is found for net return (0.962). The results comparison showed that ANN and ANFIS models outperform linear models to predict yield, economic profit, and global warming of wheat production.

Keywords: Energy, Economic analysis, Global warming, Modeling, Wheat

1. Introduction

Today, one of the essential topics of producers and governments is sustainable food production. According to the raising environmental impacts effected with unsustainable agricultural production, more researches are needed on the greenhouse gas (GHG) of agricultural products (Romero-Gámez et al. 2014). In agricultural activity, sustainability can be intended from various perspectives such as economic, energy and environmental. Energy

consumption in agriculture has increased in recent years according the population growth and raising need for food. This has led to an increase GHG emissions and environmental deterioration. Wheat is one of the common cereals because of its adaptation to different climates (Liu et al. 2019). It is widely cultivated in Iran, mainly for its seed, and is a strategic production because wheat is popular cereals in the Iranian diet.

According to Tabatabaeefar et al. (2009) the relationship between the energy source and agricultural systems is close. Besides, energy consumption and environmental quality are mutually dependent (Alhajj Ali et al. 2013). Energy resources affect the environment, including climate pollution, damage to human health, and GHG emissions. Hence, high energy consumption leads to a deteriorating environment. The efficient use of energy leads to cost savings, reduction of GHG emissions and conservation of natural resources (Nabavi-Pelesaraei et al. 2018). To achieve sustainable agriculture goals and improve energy use efficiency, energy and economic analysis are essential (Naderloo et al. 2012). In other word, it is necessary to study patterns of energy use in agricultural productions to select a sustainable and optimal model, reduce production costs and environmental pollution.

Life cycle assessment (LCA) is a valuable procedure that is generally applied to assess and investigate the environmental aspects of products or their operations. It can be also applied to assess the agricultural systems sustainability (Fathollahi et al. 2018). LCA is generally utilized to estimate all direct and indirect environmental pollution of systems (Mohammadi et al. 2015). Global warming potential (GWP), which is result from greenhouse gas emissions is one of the basic environmental indicators.

The energy consumption pattern varies according to management and agricultural systems, climate, and other conditions; therefore one of the momentous steps to meet sustainable agriculture goals is determining the relationship between outputs and inputs in agricultural production processes (Naderloo et al. 2012). The focus of production functions is on the

efficient allocation of resources (Ghasemi-Mobtaker et al. 2012). Models can also predict the environmental effects of agricultural systems, therefore, they are considered as an important tool for best management (Nabavi-Pelesaraei et al. 2018).

In recent years, several mathematical methods have been used to examine the relationship between inputs consumption and agricultural production (Singh et al. 2007; Abdi et al. 2012; Salehi et al. 2014; Antanasijević et al. 2015; Kaab et al. 2019a). In addition to mathematical methods, artificial neural networks (ANNs) are a strong and accurate tool for forecasting the performance of various systems (Taki et al. 2012b).

The main aim of the ANNs techniques is to solve solution in the same method that intelligence would. ANNs can be used to model and estimate different factors such as output energy, economical index, and GHG emissions (Kaab et al. 2019a). Taki et al (2012b) developed various ANNs to predict the energy output of corn silage cultivation in Iran. In another study, ANNs methodology was used to predict the greenhouse inside temperature in a semi-solar greenhouse (Taki et al. 2016). Soltanali et al. (2017) used ANNs technique to model the energy flows in kiwifruit cultivation. Nabavi-Pelesaraei et al. (Nabavi-Pelesaraei et al. 2018) applied ANNs approach for forecast the output energy and environmental pollution of paddy farms in the north of Iran.

Another intelligent system for modeling and forecasting is an ANFIS (Nabavi-Pelesaraei et al. 2019). It is a favorable method for the interpretation of non-linear systems (Naderloo et al. 2012). Like ANNs methodology, ANFIS has outstanding learning and has been applied to solve different problems. In recent years many research have been performed about the use of ANFIS technique in agricultural production systems. A few of these researches are shown in Table 1.

Table 1
A summary of the researches about the application of different modeling techniques in agricultural systems.

Surveyed study	Studied area	**mathematical methods**	**ANNs**	**ANFIS**	**Modeled case**
Hatirli et al. (2006)	Turkey	Yes	No	No	Crop yield of tomato production
Ghasemi Mobtaker et al. (2010)	Iran	Yes	No	No	Alfalfa yield based on inputs cost
Ozkan et al. (2011)	Turkey	Yes	No	No	Crop yield of greenhouse tomato production
Ghasemi-Mobtaker et al. (2012)	Iran	Yes	No	No	Alfalfa yield based on inputs energy
Ranković et al. (2012)	Serbia	No	No	Yes	Dam behavior
Naderloo et al. (2012)	Iran	No	No	Yes	Grain yield of irrigated wheat
Singh et al. (2012)	India	No	No	Yes	Young's Modulus
Taki et al. (2013)	Iran	Yes	No	No	Tomato greenhouse yield
Akib et al. (2014)	Malaysia	Yes	No	Yes	Scour depth in bridges
Salehi et al. (2014)	Iran	Yes	No	No	Greenhouse button mushroom yield, Income
Petković, (2015)	Serbia	No	No	Yes	Wind speed distribution
Amirkhani et al. (2015)	Iran	No	Yes	Yes	performance of solar chimney power plants
Justesen et al. (2015)	Denmark	No	No	Yes	Voltage of a fuel cell
Taki et al. (2016)	Iran	Yes	Yes	No	Inside temperature and energy lost of greenhouse
Taheri-Rad et al. (2017)	Iran	Yes	Yes	No	Energy flows of different paddy rice cultivars production
Mensour et al. (2017)	Morocco	No	Yes	No	Solar energy potential
Raheli et al. (2017)	Iran	Yes	No	No	DEA scores
Nabavi-Pelesaraei et al. (2018)	Iran	Yes	Yes	Yes	Environmental effects and output energy in paddy production
Present study	**Iran**	**Yes**	**Yes**	**Yes**	**Wheat yield, Economic indices, Global warming**

Given the above, the aim of this research was to assess the wheat farms sustainability in Iran. For that achieve this aim, the following main steps have been considered:

- Studying energy consumption model and economic indices in wheat farms.
- Investigation of GHG emission in wheat farms using the LCA approach.
- Developing linear regression (LR), ANNs, and ANFIS models to predict energy use, economic profit, and global warming in wheat cultivation.
- Evaluation of the mentioned models to specify the best pattern with consideration of sustainability development in wheat farms.

2. Methodology and data

2.1. Sampling design and geographical status

This research was performed in Hamedan state of Iran; which the geographical location is located of 33° 59′ and 35° 48′ N and 47° 34′ and 49° 36′ E (Ministry of Jihad-e-Agriculture of Iran 2019). The location of the study area shows in Fig. 1. The data requirement was collected from 75 wheat farms using questionnaires and interviews. The inputs data include, diesel fuel, biocides, etc. and the economic data include inputs cost and different operations cost. In this study considering Cochran's sample size formula and using simple random sampling technique, the suitable size of sample was calculated (Ghasemi-Mobtaker et al. 2012):

$$n = \frac{N(s \times t)^2}{(N-1)d^2 + (s \times t)^2} \quad (1)$$

Where, *n* and *N* is the sample and population size, respectively, *s* is the SD, *t* is the t value at 95% confidence limit (1.96) and *d* is the permissible error (5%).

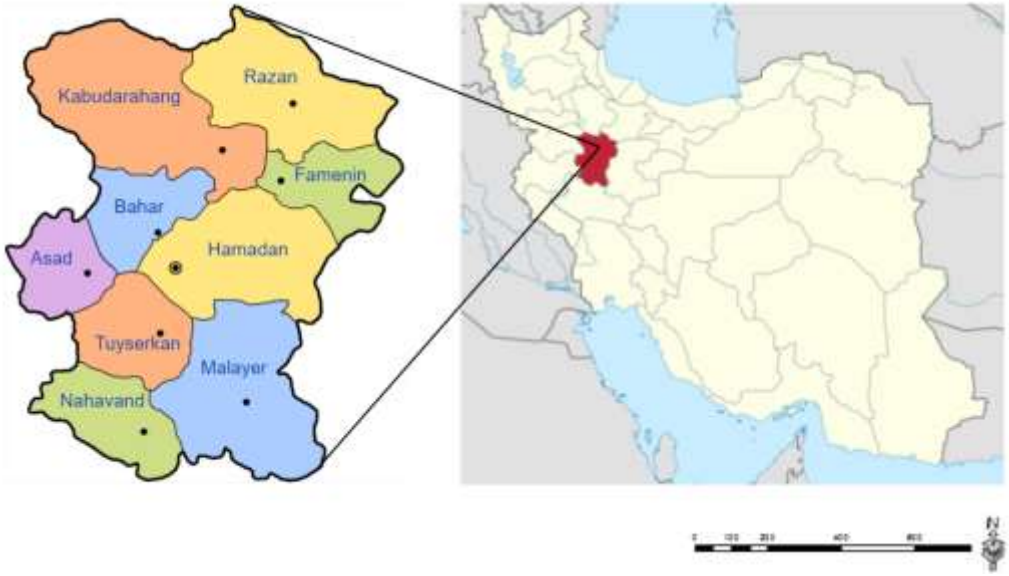

Fig. 1. Geographical location of the Hamedan province

2.2. Energy Input-output and economic performance

In the case of wheat cultivation, energy input resources contain human labor, machines, fertilizers, diesel fuel, biocides, electricity and seed. The energy output resource including wheat grain and straw. Table 2 demonstrates the energy coefficients equivalent of different inputs/outputs in wheat cultivation.

Table 2

Inputs-outputs energy equivalent in wheat cultivation.

Items		**Units**	**Energy equivalent (MJ unit $^{-1}$)**	**Reference**
Inputs	1. Human labour	h	1.96	(Tabatabaeefar et al. 2009)
	2. Machines	kg	62.70	(Raheli et al. 2017)
	3. Diesel fuel	L	56.31	(Ghasemi-Mobtaker et al. 2010)
	4. Total fertilizer			
	(a) Nitrogen	kg	66.14	(Zangeneh et al. 2010)
	(b) Phosphate (P_2O_5)	kg	12.44	(Zangeneh et al. 2010)
	(c) Manure	kg	0.30	(Mohammadi et al. 2014)
	5. Biocides	kg	120	(Canakci et al. 2005)
	6. Electricity	kWh	11.93*	(Ghasemi-Mobtaker et al. 2012)
	7. Seed	kg	14.7	(Ozkan et al. 2004)
Outputs	1. Wheat grain yield	kg	14.7	(Ozkan et al. 2004)

2. Wheat straw yield	kg	12.5	(Mohammadi et al. 2014)

* This coefficient used according to the efficiency of power plants and power loss of distribution networks reported in references for Iran.

During the wheat production period, the input energies associated with agricultural machinery in MJ kg^{-1} are determined by considering the weight of depreciated machinery per hectare as shown in Eq. (2) (Ghasemi-Mobtaker et al. 2020a):

$$TW = \frac{G \times W_h}{T} \tag{2}$$

where TW is the depreciated weight of machinery (kg ha^{-1}), G is the total machine weight (kg), W_h is the used time of machine per hectare (h ha^{-1}) and T is the machine economical lifetime (h).

The economic analysis of wheat production is also has been researched. For this aim, the net return, a benefit to cost ratio, and productivity are calculated. The total cost of wheat production comprises both variable and fixed costs. The variable costs include costs of used materials such as electricity, diesel fuel, and others in addition to operating costs whilst the fixed costs are mainly the rental cost of 1 ha wheat farm. Data costs are computed for one ha and employed to determine various economic indices. These indices showed in Eqs. (3)-(5) (Salehi et al. 2014; Ghasemi-Mobtaker et al. 2020b)

$$\text{Net return } (\$\ ha^{-1}) = \text{Total production value } (\$\ ha^{-1}) - \text{Total production costs } (\$\ ha^{-1}) \tag{3}$$

$$\text{Benefit - cost ratio} = \frac{\text{Total production value } (\$\ ha^{-1})}{\text{Total production costs } (\$\ ha^{-1})} \tag{4}$$

$$\text{Productivity } (kg\ \$^{-1}) = \frac{\text{Wheat grain yield } (kg\ ha^{-1})}{\text{Total production costs } (\$\ ha^{-1})} \tag{5}$$

2.3. LCA framework

LCA, also known as Eco balance, and cradle-to-grave analysis is a technique to assess environmental impacts associated with all the stages of a product's life from raw material extraction through materials processing, manufacture, distribution, use, repair and

maintenance, and disposal or recycling. Designers use this process to help critique their products. LCAs can help avoid a narrow outlook on environmental concerns by (Tonini and Astrup 2012; Kaab et al. 2019b). Compiling an inventory of relevant energy and material inputs and environmental releases;

- Evaluating the potential impacts associated with identified inputs and releases;
- Interpreting the results to help in making a more informed decision.

According to this pattern, LCA consists of the following four sections: (1) Goal and scope definition, (2) Life cycle inventory (LCI), (3) Life cycle impact assessment (LCIA), (4) Life cycle interpretation (Kaab et al. 2019a; Mostashari-Rad et al. 2021).

2.3.1. Definition of goal and scope

Definition of goal and scope are a significant key to constitute the overall framework that includes functional unit (FU), system boundaries, resource allocation, and sector selection effect (Curran 2017). Fig. 2 presented the schematic design boundaries of the system for wheat farms. The wheat cultivation includes land preparation, spreading farmyard manure on the field, seed planting, irrigation, fertilizing, spraying, and harvesting using a self-propelled combine. FU is considered as one ton of product in this study, which means that all released contaminants are computed and reported based on user inputs to produce a product (Chang et al. 2014).

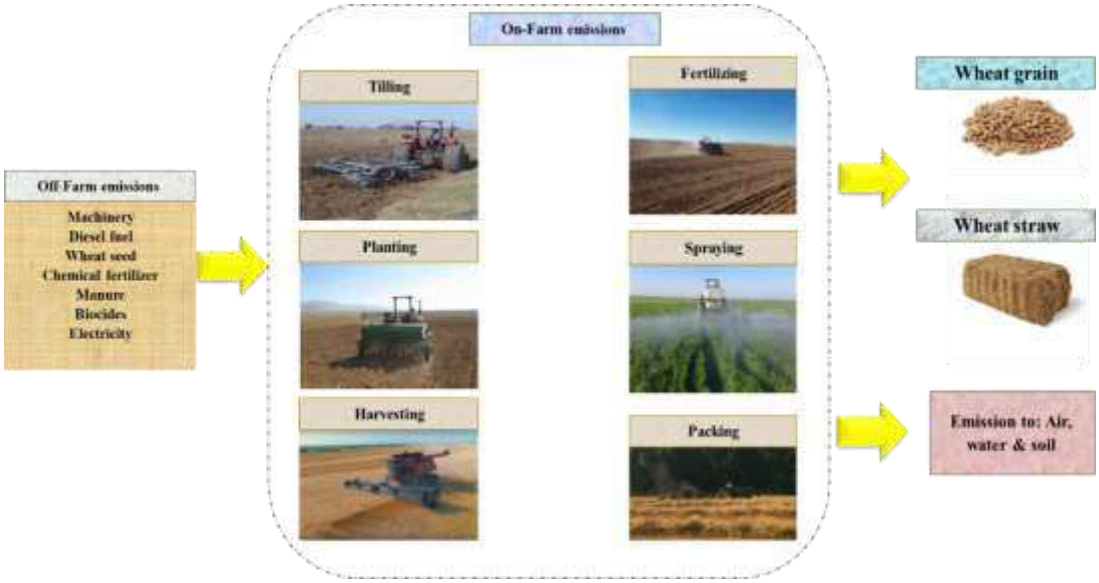

Fig. 2. System boundaries of wheat production in Hamedan province of Iran.

2.3.2. LCI analysis

LCI analysis involves creating an inventory of flows from and to nature for a product system (Mälkki and Alanne 2017). Inventory flows include inputs of water, energy, and raw materials, and releases to air, land, and water (Hasler et al. 2015). To develop the inventory, a flow model of the technical system is constructed using data on inputs and outputs. The flow model is typically illustrated with a flowchart that includes the activities that are going to be assessed in the relevant supply chain and gives a clear picture of the technical system boundaries (Recanati et al. 2018). The input and output data needed for the construction of the model are collected for all activities within the system boundary, including from the supply chain. In the present study, the system inputs include actual farm practices and resource consumption, which were collected through face-to-face questionnaires and farm visits, and the outputs were wheat grain and straw yield.

2.3.3. LCIA analysis

Following the LCI is the LCIA. This stage is purposed at assessing the important of possible environmental effects results according to the LCI (Cavalliere et al. 2018). LCIA is a classic of the following compulsory principle (Grados and Schrevens 2019):

- Choice of environmental categories, indices of category, and models of characterization.
- The classification stage, in which mass inventory components are classified and affected by particular categories.
- The evaluation of impact, where the LCI flow is classified applying one of the many feasible LCIA techniques, to the common equivalence units in which, to aggregate the total impact classification.

In previous studies, various techniques have been used to assess environmental impacts. For instance, the CML 2 baseline technique was used in LCA research of agricultural system. In this research, the CML-IA base V3.05/Netherlands, 1997 technique simultaneously with are applied with the related eleven effects categories.

2.4. Linear regression

Linear regression in statistics is a linear method for modeling the communication among one or more independent variables and dependent variable. Simple linear regression is called an independent variable (Meng et al. 2015). Furthermore, multiple linear regressions are called one independent variable. This term is different from a single-scale variable with multivariate linear regression, in which several correlated dependent variables are forecasted. Linear regression was the first type of regression analysis that was carefully studied and applied in applicable utilization (Estelles-Lopez et al. 2017). This is because the models that are linear in the unknown parameters themselves are dependent on the models that are nonlinear

parameters are not relevant, easier since fall and because the statistical properties of estimators they are simpler than summarizing (Ali and Deo 2020).

In this study, regression analysis is used to analyze and determine the communication between the response variable and explanatory variable. The variables considered for analysis in this research are ten inputs including human labor (X_1), machinery (X_2), nitrogen (X_3), phosphate (X_4), manure (X_5), diesel fuel (X_6), biocides (X_7), water (X_8), seed (X_9) and electricity (X_{10}). Seven outputs including yield (wheat grain and straw), output energy (wheat grain and straw), total production value, net return, and GWP are a dependent variable. Equations (6-12) applied for wheat production is shown as follows:

$$\text{Wheat grain yield} = e_i + \alpha_1 X_1 + \alpha_2 X_2 + \alpha_3 X_3 + \alpha_4 X_4 + \alpha_5 X_5 + \alpha_6 X_6 + \alpha_7 X_7 + \alpha_8 X_8 + \alpha_9 X_9 + \alpha_{10} X_{10} \quad (6)$$

$$\text{Wheat straw yield} = e_i + \beta_1 X_1 + \beta_2 X_2 + \beta_3 X_3 + \beta_4 X_4 + \beta_5 X_5 + \beta_6 X_6 + \beta_7 X_7 + \beta_8 X_8 + \beta_9 X_9 + \beta_{10} X_{10} \quad (7)$$

$$\text{Output energy (grain)} = e_i + \lambda_1 X_1 + \lambda_2 X_2 + \lambda_3 X_3 + \lambda_4 X_4 + \lambda_5 X_5 + \lambda_6 X_6 + \lambda_7 X_7 + \lambda_8 X_8 + \lambda_9 X_9 + \lambda_{10} X_{10} \quad (8)$$

$$\text{Output energy (straw)} = e_i + \omega_1 X_1 + \omega_2 X_2 + \omega_3 X_3 + \omega_4 X_4 + \omega_5 X_5 + \omega_6 X_6 + \omega_7 X_7 + \omega_8 X_8 + \omega_9 X_9 + \omega_{10} X_{10} \quad (9)$$

$$\text{Total production value} = e_i + \eta_1 X_1 + \eta_2 X_2 + \eta_3 X_3 + \eta_4 X_4 + \eta_5 X_5 + \eta_6 X_6 + \eta_7 X_7 + \eta_8 X_8 + \eta_9 X_9 + \eta_{10} X_{10} \quad (10)$$

$$\text{Net return} = e_i + \nu_1 X_1 + \nu_2 X_2 + \nu_3 X_3 + \nu_4 X_4 + \nu_5 X_5 + \nu_6 X_6 + \nu_7 X_7 + \nu_8 X_8 + \nu_9 X_9 + \nu_{10} X_{10} \quad (11)$$

$$\text{GWP} = e_i + \varepsilon_1 X_1 + \varepsilon_2 X_2 + \varepsilon_3 X_3 + \varepsilon_4 X_4 + \varepsilon_5 X_5 + \varepsilon_6 X_6 + \varepsilon_7 X_7 + \varepsilon_8 X_8 + \varepsilon_9 X_9 + \varepsilon_{10} X_{10} \quad (12)$$

2.5. ANNs model

The basic tools applied in machine learning are called ANNs (Kalogirou and Bojic 2000). As part of the neural their names indicate, they are inducted by the brain systems that seek to the way we humans learn reproduction (Zangeneh et al. 2011).

The neural networks include input, output and hidden layers which including of units that convert input into something that the output layer can apply (Nabavi-Pelesaraei et al. 2014).

They are a great tool for finding schema that are too complex for a human programmer to recognize and train the device (Taheri-Rad et al. 2017). ANNs are based on a set of jointed

units named artificial neurons that easily design neurons action in the brain (Taki et al. 2012a). Like the brain synapses, any nexus can transfer a signal to other nerve cells. Each neuron receives a signal, processes it and then transfer a signal to other nerve cells (Khoshnevisan et al. 2013). In this research, the networks are built with ten inputs and seven outputs (mentioned in section 2.4). For ANN-supervised training, the data were randomly separated into three parts, including, training (70%), testing (15%) and validation (15%).

2.6. ANFIS model

ANFIS is an ANN-based fuzzy inference system (Ahmed and Shah 2017). The method was introduced in the early 1990s. As regards it combined both fuzzy logic principles and neural networks, this has the possible to benefit both use a single framework (Naderloo et al. 2012). Its inference system corresponds to a set of fuzzy If/Then statements which have learning ability to proximate nonlinear functions (Khoshnevisan et al. 2014). Therefore, ANFIS is introduced as a comprehensive estimator. Applying the ANFIS more efficiently and optimally, it is possible to use the best parameters acquired by genetic algorithm (Mousavi-Avval et al. 2017). For determine nodes in a ANFIS structure and nodes in a similar layer, there are five layers that have the same function. Fig. 3 shows the structure, where in circles and squares are marked by fixed nodes and adaptive, respectively.

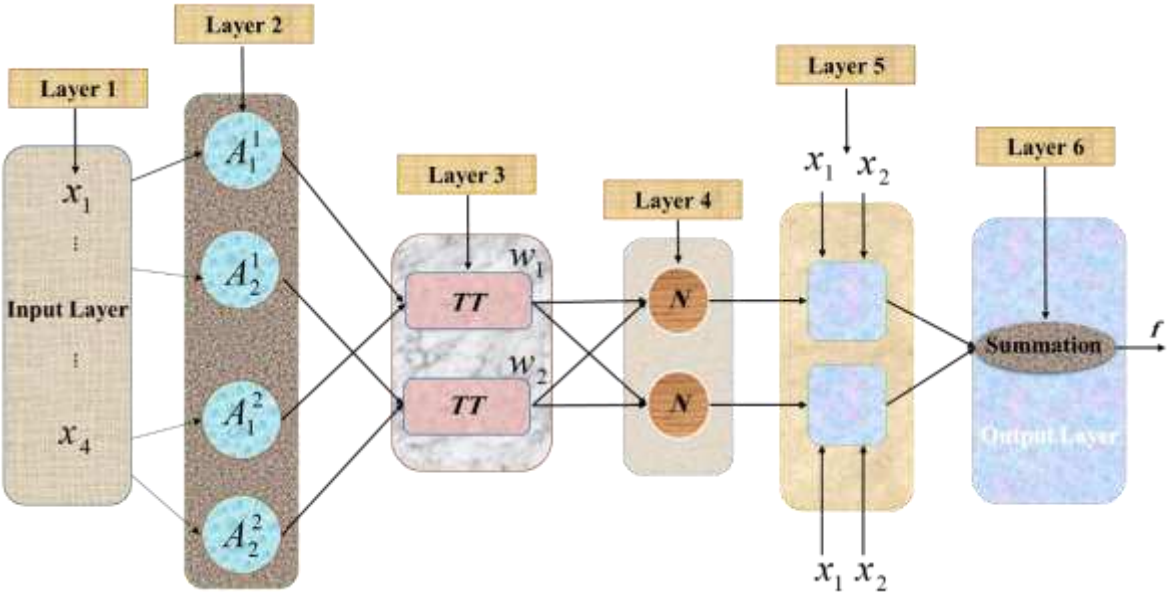

Fig. 3. The ANFIS model structure.

In this study, by classifying ten input variables in five clusters first and then into two clusters, the clustering method has been used. Fig. 4 showed three-level ANFIS are developed, in total eight ANFIS sub-networks.

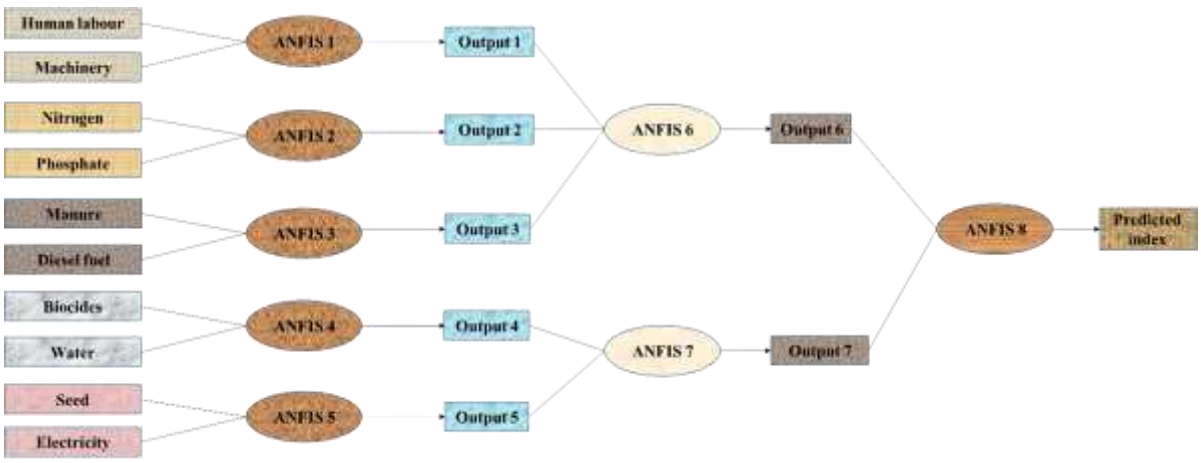

Fig. 4. 3-level ANFIS structure to forecast wheat yield, economical profit, and GWP of wheat cultivation.

2.7. Performance comparison between LR, ANFIS and ANN models

233 Differences between observed data and calculated LR, ANFIS and ANN models results are
234 applied to evaluate performance. Several statistical metrics, namely, coefficient of
235 determination (R^2), relative root mean square error (RRMSE) and root mean square error
236 (RMSE) according to Eqs. (6)-(8) used to evaluate the performance of models (Amirkhani et
237 al. 2015).

$$R^2 = 1 - \sqrt{\frac{\sum_{i=1}^{n}(P_i - A_i)^2}{\sum_{i=1}^{n} A_i^2}} \tag{6}$$

$$RRMSE = \frac{\sqrt{\frac{1}{n}\sum_{i=1}^{n}(P_i - A_i)^2}}{\sum_{i=1}^{n} P_i} \times 100 \tag{7}$$

$$\mathrm{RMSE} = \sqrt{\frac{1}{\mathrm{n}}\sum_{i}^{n}\left(P_i - A_i\right)^2} \tag{8}$$

238 Where P_i denote the observed, A_i modeled output for the ith training vector, *and n* denotes
239 the quantity of training vectors.

240 *2.8. Applied software*

241 By using Excel spreadsheets the energy input-output and economic indices are computed.
242 SimaPro V9.0.0.29 is applied to perform LCA. For applying linear regression, Payton
243 software package is employed and for ANNs and ANFIS analysis, Matlab software is used.

244 **3. Results and discussion**

245 *3.1. Energy and economic analysis*

Table 3 presents the average of inputs/output energy in wheat cultivation calculated by applying equivalent of energy in inputs and outputs as well as wheat economic indices. The results revealed that around 43055 MJ ha^{-1} of energy is required for various processes in wheat production. The amount of wheat grain and straw yield were about 5287 and 3175 kg ha^{-1}, respectively. Accordingly, the average amount of the total output energy was computed as 117407 MJ ha^{-1}. Fig. 5 shows the percent of the energies input in wheat cultivation. The mean of inputs energy consumption was highest for electricity (about 55%) which is applied in the irrigation system. This results are in agreement with the reported others studies including (Singh et al. 2002), (Ghasemi-Mobtaker et al. 2012) and (Chen et al. 2019). In a study that energy consumption for sugarcane production was investigated the electricity with 49% and 55% had the largest share in the total input energy in planted and ratoon farms, respectively (Kaab et al. 2019a). The use of high-efficiency irrigation systems that use a photovoltaic system to provide renewable electricity can reduce electricity use in wheat cultivation. Furthermore the application of minimum tillage systems, use of residual crop management as a green fertilizer and reduce use chemical fertilizers and also decrease the use of biocides by applying the new techniques of spraying can enhance energy efficiency in wheat cultivation.

Table 3

Inputs/outputs energy and economic indices in wheat cultivation.

Items	Unit	Average	SD
A. Energy inputs	MJ ha^{-1}		
1. Human labour		178.60	30.66
2. Machinery		1195.15	184.96
3. Diesel fuel		5726.73	750.37
4. Chemical fertilizers			
(a) Nitrogen		5851.63	2528.76
(b) Phosphate (P_2O_5)		1001.86	433.82
(c) Manure		624.00	653.85
5. Biocides		285.12	80.10

6. Electricity		23534.59	6646.94
7. Seed		4656.96	510.60
Total energy input		**43054.63**	**8652.21**
B. Energy outputs	MJ ha^{-1}		
1. Wheat grain		77723.80	14376.67
2. Wheat straw		39683.33	9401.63
Total energy output		**117407.13**	**22602.35**
C. Economic indices			
Total value of wheat cultivation	$ ha^{-1}	854.86	158.28
Total cost of wheat cultivation	$ ha^{-1}	366.57	43.64
Benefit - cost ratio	-	2.33	0.36
Net return	$ ha^{-1}	488.29	141.19
Productivity	kg $\$^{-1}$	14.42	2.20

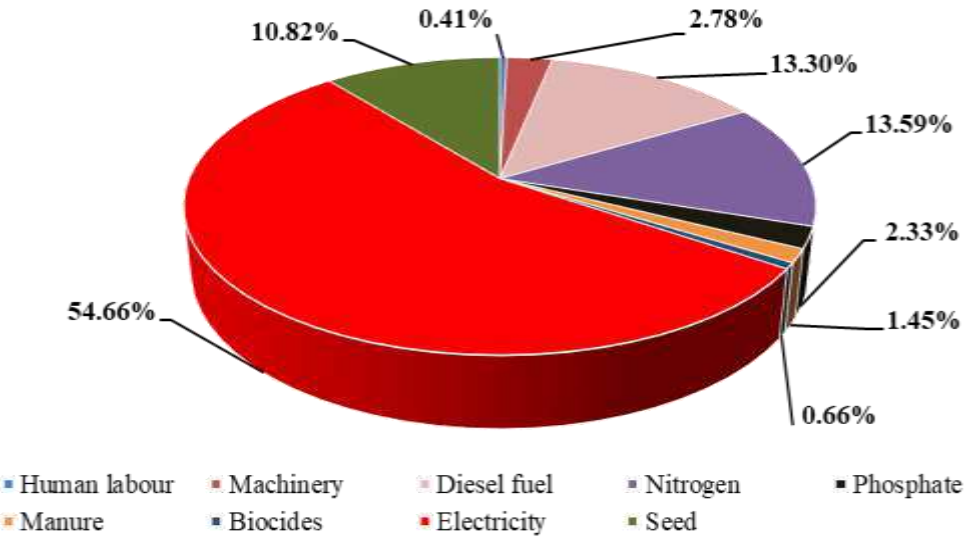

Fig. 5. The energy input quota for wheat production in study region.

Economic indicators in wheat cultivation are calculated using Eqs. (3)−(5) and the results are listed in Table 3. The results demonstrated that the total wheat cultivation value was about 855 $ ha^{-1}. Using total cost and benefit of wheat cultivation, net return and benefit - cost ratio was calculated as 488.29 $ ha^{-1} and 2.33, respectively. Also, the productivity index was calculated as 14.42 kg $\$^{-1}$, indicating that about 14 kg of wheat was produced in the region

for every spending dollar. In the study conducted in the northern Iran the net return indicator in wheat production was about 627 \$ ha^{-1} for the semi-mechanized systems, while in mechanized systems this index was calculated as 994 \$ ha^{-1} (Amoozad-Khalili et al. 2020). Fig. 6 displays the share of cost input for wheat production obtained from economic analysis. The shares of irrigation (electricity and water) and human labour cost were around 33% and 21%, respectively, from the total expenditures. Similar study were showed in the literature that the costs of water for irrigation were highest in the alfalfa farms (Ghasemi-Mobtaker et al. 2012). The results also showed that inputs cost was least for manure and biocides which accounted 1.9% and 2%, respectively. Mohammadi et al. (2010a) investigated economical indices for kiwifruit in the northern Iran and reported that human labour, renting and fertilizers had the highest energy cost.

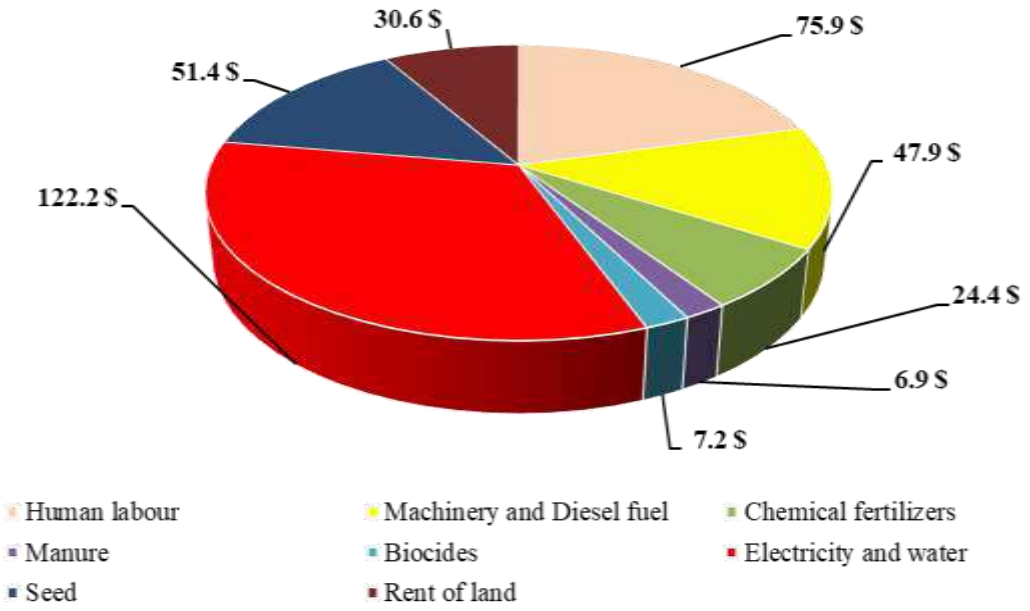

Fig. 6. The percent of input costs for wheat cultivation in study region.

3.2. LCA result interpretation

The average environmental indexes were calculated for one ton of wheat production and results illustrated in Table 4. Global warming is one of the most common environmental indicators applied as an indicator to assess environmental sustainability in agricultural

284 production. The results demonstrated that wheat cultivation in the study area causes to release
285 of 624.29 kg $CO_{2\ eq.}$ ton^{-1}. In a research conducted in the north of Iran, this index was
286 reported as 291 kg $CO_{2\ eq.}$ ton^{-1} for wheat cultivation (Soltani et al. 2013). In another study
287 on wheat production, the global warming index of irrigated farms was reported higher than
288 dryland farms (Mondani et al. 2017). Khakbazan et al. (2009) reported that according to
289 cultivation place, the rate of fertilizer consumption and planting system, emissions of
290 greenhouse gas for wheat cultivation were in the range of 410-1130 kg CO_2 eq ha^{-1}. In
291 another study the emission amount for potato production was reported to be 2350 kg CO_2 eq
292 ha^{-1} (Ferreira et al. 2011).

Table 4

The average environmental indexes in wheat cultivation.

Impact categories (Nomenclature)	Unit	Average	SD
Abiotic depletion (AD)	kg Sb $_{eq.}$	0.0028	0.0006
Abiotic depletion of fossil fuels (ADF)	MJ	6673.1319	1598.0940
Global warming (GWP)	kg $CO_{2\ eq.}$	624.2944	129.9279
Ozone layer depletion (OLD)	kg CFC-11 $_{eq.}$	0.0001	1.3002
Human toxicity (HT)	kg 1,4-DB $_{eq.}$	229.1000	42.7028
Freshwater aquatic ecotoxicity (FE)	kg 1,4-DB $_{eq.}$	173.2949	34.0226
Marine aquatic ecotoxicity (ME)	kg 1,4-DB $_{eq.}$	319757.6377	60168.7216
Terrestrial ecotoxicity (TE)	kg 1,4-DB $_{eq.}$	12.7851	2.7699
Photochemical oxidation (PO)	kg $C_2H_{4\ eq.}$	0. 1202	0.0268
Acidification (AC)	kg $SO_{2\ eq.}$	7.6978	3.8658
Eutrophication (EP)	kg $P_4^{-3}{}_{eq.}$	2.6710	0.9496

293 The normalized distribution of different inputs in one ton of wheat yield is illustrated in Fig.
294 7. According to the results of normalization, ME category has the highest environmental
295 effect in wheat cultivation, where in the significant contribution is related to chemical
296 fertilizer. Soltanali et al. (2017) related that gasoline and fertilizer as the main cause of high
297 field emissions for agricultural products. Fathollahi et al. (2018) calculated On-Farm
298 emissions of corn silage to EP whose value was equal to 2.73 kg PO_{4eq} t^{-1}. Kaab et al.
299 (2019a) cited ME levels for plant farms (51636.91 kg 1,4-DB $_{eq.}$) and ratoon farms (35448.06

kg 1,4-DB $_{eq.}$) as the most substantial impacts to this section. As shown in Fig. 7, the results of normalized confirm on proper management of fertilizer utilization to reduce the environmental effects of chemical fertilizer production in wheat production. The use of conservation tillage methods to improve soil structure as well as the use of organic fertilizers to increase soil organic matter can be an effective step in decreasing the application of fertilizers.

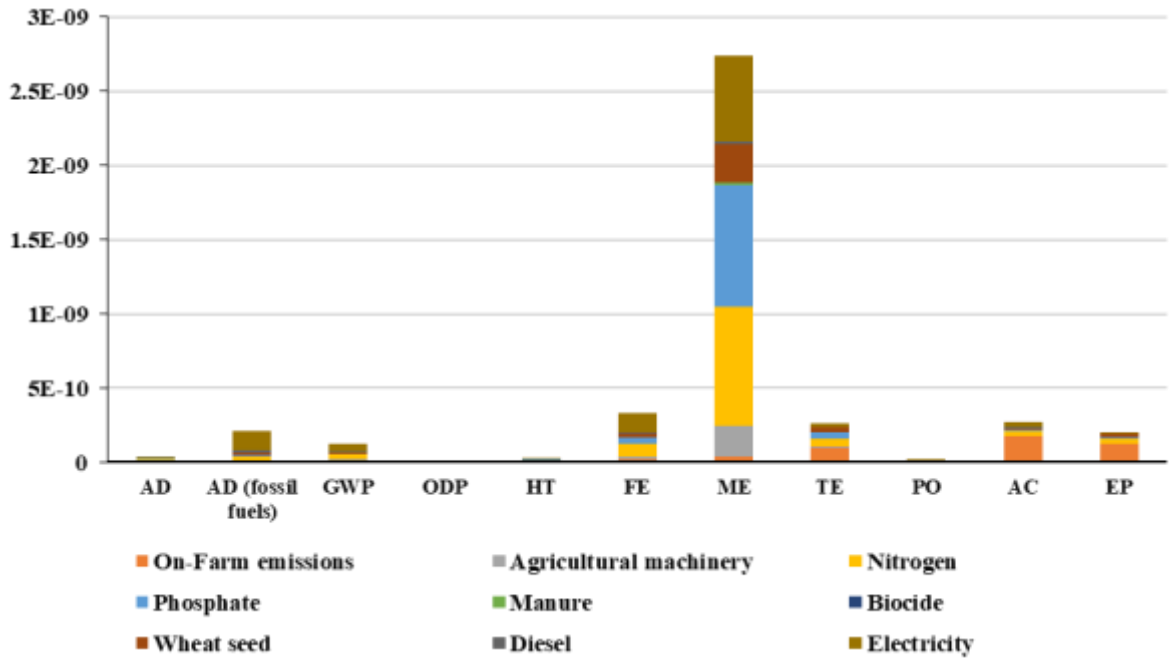

Fig. 7. Normalization of different inputs in the environmental impact categories for wheat production.

3.3. Evaluation of linear regression

The linear regression analysis is applied to determine the communication between outputs and inputs of wheat cultivation in this research. The independent variables considered for analysis in this research are ten inputs applied in wheat cultivation (mentioned in table 3) and the depended variables are seven outputs including yield (wheat grain and straw), output energy (wheat grain and straw), total production value, net return, and GWP. Based on Eq. (6) to Eq. (12) for all investigated models regression coefficients and statistics indices are calculated using Payton software package.

3.3.1. Regression coefficients

The regression coefficients for Eqs. (6)-(12) were estimated and the results are as below:

$$\text{Wheat grain yield} = 4033.85 + 4.45X_1 - 46.98X_2 + 6.78X_3 + 13.67X_4 + 0.08X_5 - 8.38X_6 - 22.39X_7 - 0.05X_8 + 1.31X_9 + 0.32X_{10}$$

$$\text{Wheat straw yield} = 3173.85 + 2.55X_1 - 36.54X_2 + 1.59X_3 + 7.45X_4 + 0.10X_5 - 13.83X_6 + 26.97X_7 - 0.09X_8 + 1.96X_9 + 0.33X_{10}$$

$$\text{Output energy (grain)} = 59297.66 + 65.54X_1 - 690.67X_2 + 99.68X_3 + 201X_4 + 1.28X_5 - 123.24X_6 - 329.18X_7 - 0.86X_8 + 19.38X_9 + 4.72X_{10}$$

$$\text{Output energy (straw)} = 39673.22 + 31.97X_1 - 456.85X_2 + 19.89X_3 + 9317X_4 + 1.32X_5 - 172.91X_6 + 337.24X_7 - 1.13X_8 + 24.58X_9 + 4.22X_{10}$$

$$\text{Total value production} = 677.25 + 0.71X_1 - 7.87X_2 + 1.01X_3 + 2.18X_4 + 0.01X_5 - 1.64X_6 - 2.27X_7 - 0.01X_8 + 0.25X_9 + 0.05X_{10}$$

$$\text{Net return} = 3356.60 - 3.74X_1 + 39.11X_2 + 6.76X_3 - 12.48X_4 - 1.07X_5 + 6.73X_6 + 19.12X_7 - 0.95X_8 - 2.06X_9 - 1.26X_{10}$$

$$\text{GWP} = 184.88 - 1.14X_1 + 1.08X_2 + 0.93X_3 - 2.30X_4 - 0.00X_5 + 1.78X_6 + 9.12X_7 + 0.02X_8 + 0.54X_9 + 0.07X_{10}$$

Wheat grain yield: phosphate, nitrogen, and human labor are major inputs that have a positive effect, whereas machinery, biocides, and diesel fuel are major inputs that have a negative effect on wheat grain yield.

Wheat straw yield: biocides, phosphate, and human labor are major inputs that have a positive effect on wheat straw yield; whereas machinery and diesel fuel are major inputs that have a negative effect on wheat straw yield.

Output energy (grain): nitrogen, phosphate, and human labor are major inputs that have a positive effect on wheat grain energy; whereas machinery, biocides, and diesel fuel are major inputs that have a negative effect on wheat grain energy.

Output energy (straw): phosphate and biocides are major inputs that have a positive effect on wheat straw energy; whereas machinery and diesel fuel are major inputs that have a negative effect on wheat grain energy.

Total value production: phosphate and nitrogen are major inputs that have a positive effect on total value production; whereas machinery, biocides, and diesel fuel are major inputs that have a negative effect on total value production.

Net return: machinery and biocides are major inputs that have a positive; whereas phosphate is a major input that has a negative effect on net return.

GWP: biocides and diesel fuel are major inputs that have a positive effect on GWP; whereas phosphate and human labor are major inputs that have a negative effect on net return.

3.3.2. Evaluation of model by linear regression

Statistical parameters of the different models in predicting yield, economic profit, and global warming in wheat farms are shown in table 5. According to the table, the R^2 vary in the range of 0.264 to 0.978. The R^2 value for net return predicting was determined as 0.978, indicating that this model can explain about 0.98 of the variability in the net return. For this model, RMSE and RRMSE were computed to be 460.616 and 0.033, respectively; which indicates the best capability of this model in predicting the net return of wheat cultivation.

Table 5
The results of different models arrangements by linear regression.

Independent variables	Statistics indices		
	R^2	RMSE	RRMSE
Wheat grain yield	0.677	551.433	0.104
Wheat straw yield	0.438	559.866	0.176
Output energy (grain)	0.677	8106.065	0.104
Output energy (straw)	0.438	6998.327	0.176
Total value production	0.661	92.008	0.107
Net return	0.978	460.616	0.033
GWP	0.264	110.657	0.171

3.4. Evaluation of ANNs

The statistical Indicators of the best ANN models in forecasting global warming and outputs of wheat production are listed in Table 6. In this research Matlab software was used to model implementation and data training and for all models, statistical metrics including R^2, RMSE, and RRMSE were calculated. For the ANN models multilayer neural networks with a Levenberg-Marquardt (LM) algorithm were used. The results indicated that for wheat farms, the R^2 vary in ranges of 0.236 to 0.956 for the training stage, 0.332 to 0.933 for the testing stage, and 0.278 to 0.954 in overall. The best ANN structures for independent variables are

also listed in Table 6. The results indicated that the structure with two hidden layers is the best ANN structure in all models.

In the previous studies ANN has been used to predict of various factors; for example output energy of corn silage (Taki et al. 2012b); environmental impact and yield of lentil cultivation (Elhami et al. 2017); energy, economic and environmental effects of rice milling factories (Nabavi-Pelesaraei et al. 2019); winter wheat yield (Chen and Jing 2017). ANN models used to estimate yield and environmental impact in tea production with R^2 values from 0.878 to 0.990 (Khanali et al. 2017). Kaab et al. (2019a) utilized an ANN model to forecast output energy generation and environmental impact in sugarcane cultivation. They reported that a 9-10-5-11 structure (9 neurons in the input layer, 10 and 5 neurons in two hidden layers and 11 neurons in the output layer) is the best predictive ANN model for planted farms. Moreover, for ratoon farms, the 7-9-6-11 structure had the best performance. The developed various multilayer perception ANN models were applied to predict grape yield with respect to inputs and was observed that the 7-6-1 architecture was the best model with the highest mean correlation coefficient and the least standard deviation (Khoshroo et al. 2018). In another study several ANNs models with different topologies and distinct learning algorithms was used to modeling energy consumption in greenhouse tomato cultivation. The results showed that the best prediction was obtained by the network topology of 10-20-7-9-1 with tangent sigmoid and purelin transfer functions employed in hidden layers and the output layer, respectively. Furthermore, the researchers found that, among the different training algorithms, the LM algorithm produced the best result (Khoshnevisan et al. 2015).

Table 6
The results of different models arrangements by ANN.

Independent variables	Statistics indices									The best structure
	Overall			Train			Test			
	R^2	RMSE	RRMSE	R^2	RMSE	RRMSE	R^2	RMSE	RRMSE	
Wheat grain yield	0.713	561.134	0.106	0.722	540.392	0.102	0.682	659.413	0.125	10-7-7-1
Wheat straw yield	0.665	439.658	0.138	0.669	435.573	0.137	0.684	460.510	0.145	10-10-5-1
Output energy (grain)	0.764	7025.313	0.090	0.755	7168.764	0.092	0.798	6218.139	0.080	10-9-6-1
Output energy (straw)	0.278	8754.982	0.221	0.236	9275.302	0.234	0.602	5234.188	0.132	10-9-6-1

Total value production	0.539	115.851	0.136	0.526	120.383	0.141	0.552	88.324	0.103	10-9-10-1
Net return	0.954	669.146	0.048	0.956	662.014	0.048	0.933	705.407	0.051	10-9-5-1
GWP	0.313	107.422	0.167	0.312	111.315	0.173	0.332	84.076	0.131	10-5-10-1

3.5. Evaluation of ANFIS

In this study, Matlab software was used for ANFIS analysis and the best integration of variables in the ANFIS model with the best accuracy was identified. The statistical components of the 3-level ANFIS structure in forecasting yield, economical profit and GWP of wheat cultivation are listed in Table 7. According to results, accepting Gbell MFs and linear MF for input and output layers, respectively; ANFIS offers the best performance. In other words, this hybrid learning method can simulate the communication input and output, the optimized MF contribution specify, and provide great precision.

The 3-level ANFIS model (ANFIS 8) shown in results study, the highest R^2 is found for net return (0.962). In this model, the RRMSE is computed to be 0.002. The results in the 3-level ANFIS model also showed that, R^2 for wheat grain yield was found to be 0.751 for the ANFIS (8) model and RRMSE was calculation to be 0.008. Results of the current study agreement by Kaab et al. (Kaab et al. 2019a) which applied ANFIS to forecast output energy and environmental effects of sugarcane cultivation. Naderloo et al. (2012) applied ANFIS model to predict the wheat grain yield in Iran. They clustered the input vector for ANFIS into two groups and trained two networks. Electricity, diesel fuel and chemical fertilizer energies were inputs for ANFIS 1, and machinery, labor, chemicals, water and seed energies considered for ANFIS 2. They found the RMSE values to be 0.013 and 0.018 for ANFIS1 and ANFIS 2, respectively. Also the R2 values were found to be 0.996 and 0.992for ANFIS 1 and ANFIS 2, respectively. Finally, they used these predicted values as the inputs of the third ANFIS and found that the RMSE and R^2 were 0.013 and 0.996, respectively.

Table 7
The specifications of the best structure of first ANFIS model for forecasting in wheat cultivation using 3-level ANFIS

Independent variables	Learning model	Type of MF		Number of MF		ANFIS method	R^2	RMSE	RRMSE
		Input	Output	Input	Epoch				
Wheat grain yield	Hybrid	Gbell	Linear	5,6	32	1	0.079	875161.899	0.031
						2	0.379	693005.099	0.024
						3	0.596	391588.151	0.014
						4	0.179	777625.403	0.027
						5	0.431	552506.823	0.019
						6	0.687	296973.736	0.010
						7	0.501	477831.396	0.017
						8	0.751	235118.837	0.008
Wheat straw yield	Hybrid	Gbell	Linear	5,6	32	1	0.046	536890.809	0.053
						2	0.194	452969.148	0.045
						3	0.353	362382.016	0.036
						4	0.131	490717.391	0.049
						5	0.285	404903.776	0.040
						6	0.430	318452.654	0.032
						7	0.316	387070.218	0.038
						8	0.520	268382.638	0.027
Output energy (grain)	Hybrid	Gbell	Linear	5,6	32	1	0.065	2E+08	0.032
						2	0.494	1E+08	0.017
						3	0.590	8E+07	0.014
						4	0.178	2E+08	0.028
						5	0.397	1E+08	0.020
						6	0.633	9E+07	0.015
						7	0.316	2E+08	0.033
						8	0.720	6E+07	0.010
Output energy (straw)	Hybrid	Gbell	Linear	5,6	32	1	0.051	8E+07	0.053
						2	0.135	1E+08	0.069
						3	0.323	6E+07	0.038
						4	0.089	8E+07	0.051
						5	0.277	6E+07	0.040
						6	0.426	5E+07	0.032
						7	0.317	6E+07	0.038
						8	0.520	4E+07	0.027
Total value production	Hybrid	Gbell	Linear	5,6	32	1	0.054	23848.661	0.033
						2	0.437	14206.549	0.019
						3	0.577	10692.658	0.015
						4	0.191	20429.046	0.028
						5	0.407	14951.523	0.020
						6	0.681	8109.329	0.011
						7	0.446	13918.281	0.019
						8	0.716	7234.989	0.010
Net return	Hybrid	Gbell	Linear	5,6	32	1	0.187	7933570.020	0.041
						2	0.208	8276753.136	0.043
						3	0.862	1349238.577	0.007
						4	0.369	6189360.849	0.032
						5	0.453	5465424.277	0.029
						6	0.871	1259206.718	0.007
						7	0.524	4734245.043	0.025
						8	0.962	369993.218	0.002
GWP	Hybrid	Gbell	Linear	5,6	32	1	0.077	15590.825	0.038
						2	0.024	16397.393	0.040
						3	0.079	15486.506	0.037
						4	0.060	15817.617	0.038
						5	0.144	14309.311	0.035
						6	0.208	13500.011	0.033
						7	0.176	13883.412	0.033
						8	0.543	7696.054	0.019

3.6. Comparison of results from different models

In the final part of the research, the results of different models including linear regression, ANFIS and ANN models were evaluated using coefficients of determination. Fig. 8 shows R^2 in different models. According to Fig. 8, the R^2 index obtained by ANFIS model for predicting dependent variables; including wheat grain yield, output energy (straw), total value production, and GWP are higher than R^2 of other models. In other words, ANFIS model outperforms other models. However, R^2 obtained by ANN model for predicting wheat straw yield and output energy (grain) are higher than R^2 of other models. Regarding the net return index, there was no significant difference between the accuracy of the three models. According to Fig. 8, both models of ANN and ANFIS can predict yield, economic profit, and global warming of wheat production with fair accuracy. The observation agrees well with the findings reported by Khashei-Siuki et al. (2011) to predict wheat yield and for tomato production in greenhouse (Khoshnevisan et al. 2015). In a study carried out by Kaab et al. (Kaab et al. 2019a), ANFIS and ANN models have been used to forecast energy output and environmental issue of sugarcane farms. The results showed that in the plant farms ANN model is better than ANFIS in all dimensions, but in case of ratoon farms, ANFIS models achieve better accuracy than ANN prediction.

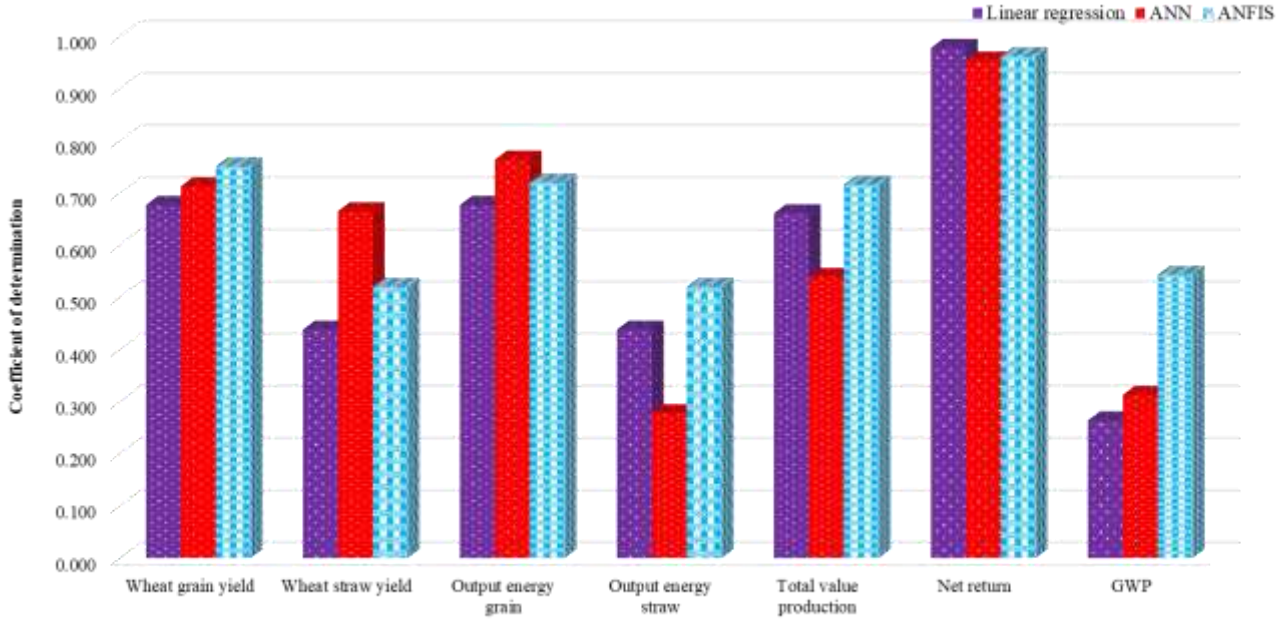

Fig. 8. Comparison between R^2 in different models.

4. Conclusions

The purpose of this research was to applied linear regression, ANNs, and ANFIS models to predict yield, economic profit, and global warming of wheat production. Moreover, LCA was used to evaluate the environmental issue of wheat cultivation in the central area of Hamedan state. Based on the results obtained from current study, the mean wheat grain and straw yield were about 5287 and 3175 kg ha^{-1}, respectively, and the mean output and inputs energy are 117407.13 MJ ha^{-1} and 43054.63 MJ ha^{-1}, respectively. Electricity was highest in consumption of energy in wheat farms. The results of normalization in LCA showed that ME has the highest environmental pollution in wheat farms. The linear regression results demonstrated that the R^2 value for net return predicting was 0.978, indicating that this model can explain about 0.98 of the variability in the net return. The results of ANN model showed the structures with two hidden layers were the best topologies, and ANFIS results in the third-level demonstrated, the highest R^2 is found for net return is 0.962 in ANFIS eight. In this study according to linear regression, ANN and ANFIS models are expanded to predicted

yield, economic profit, and global warming for wheat production. Modeling results with ANN and ANFIS better than by linear regression in wheat cultivation. Due to the uncertainty, ANFIS models are outperform ANN and linear regression models. Generally, in modeling and forecasting, ANFIS models are better than ANN and linear regression models, considering different social and technical factors in wheat farms to help decision makers to solve the problem of sustainability from different aspects.

Declarations

Ethics approval and consent to participate: Not applicable.

Consent for publication: Not applicable.

Availability of data and materials: Not applicable.

Competing interests: The authors declare that they have no competing interests.

Funding: Not applicable.

Authors Contributions: Hassan Ghasemi-Mobtaker: Data curation, Validation, Writing-Original draft, Reviewing and Editing, Supervision, **Ali Kaab:** Investigation, Writing-Reviewing and Editing, Methodology, **Shahin Rafiee**: Formal analysis, Software.

References

Abdi R, Hematian A, Ghasemi H, Shahamat EZ (2012) Sensitivity analysis of energy inputs for maize production system in Kermanshah province of Iran. Int J Plant, Anim Environ Sci 2:84–90

Ahmed AAM, Shah SMA (2017) Application of adaptive neuro-fuzzy inference system (ANFIS) to estimate the biochemical oxygen demand (BOD) of Surma River. J King Saud Univ - Eng Sci 29:237–243.

Akib S, Mohammadhassani M, Jahangirzadeh A (2014) Application of ANFIS and LR in prediction of scour depth in bridges. Comput Fluids 91:77–86.

Alhajj Ali S, Tedone L, De Mastro G (2013) A comparison of the energy consumption of rainfed durum wheat under different management scenarios in southern Italy. Energy 61:308–318.

Ali M, Deo RC (2020) Modeling wheat yield with data-intelligent algorithms. In: Handbook of Probabilistic Models. Elsevier, pp 37–87

Amirkhani S, Nasirivatan SH, Kasaeian AB, Hajinezhad A (2015) ANN and ANFIS models to predict the performance of solar chimney power plants. Renew Energy 83:597–607

Amoozad-Khalili M, Rostamian R, Esmaeilpour-Troujeni M, Kosari-Moghaddam A (2020) Economic modeling of mechanized and semi-mechanized rainfed wheat production systems using multiple linear regression model. Inf Process Agric 7:30–40.

Antanasijević D, Pocajt V, Ristić M, Perić-Grujić A (2015) Modeling of energy consumption and related GHG (greenhouse gas) intensity and emissions in Europe using general regression neural networks. Energy 84:816–824.

Canakci M, Topakci M, Akinci I, Ozmerzi A (2005) Energy use pattern of some field crops and vegetable production: Case study for Antalya Region, Turkey. Energy Convers Manag 46:655–666.

Cavalliere C, Dell'Osso GR, Pierucci A, Iannone F (2018) Life cycle assessment data structure for building information modelling. J Clean Prod 199:193–204.

Chang Y-C, Lee W-J, Wang L-C, et al (2014) Effects of waste cooking oil-based biodiesel on the toxic organic pollutant emissions from a diesel engine. Appl Energy 113:631–638

Chen P, Jing Q (2017) A comparison of two adaptive multivariate analysis methods (PLSR

and ANN) for winter wheat yield forecasting using Landsat-8 OLI images. Adv Sp Res 59:987–995

Chen X, Thorp KR, Ouyang Z, et al (2019) Energy consumption due to groundwater pumping for irrigation in the North China Plain. Sci Total Environ 669:1033–1042.

Curran MA (2017) Overview of Goal and Scope Definition in Life Cycle Assessment. Springer, Dordrecht, pp 1–62

Elhami B, Khanali M, Akram A (2017) Combined application of Artificial Neural Networks and life cycle assessment in lentil farming in Iran. Inf Process Agric 4:18–32.

Estelles-Lopez L, Ropodi A, Pavlidis D, et al (2017) An automated ranking platform for machine learning regression models for meat spoilage prediction using multi-spectral imaging and metabolic profiling. Food Res Int 99:206–215.

Fathollahi H, Mousavi-Avval SH, Akram A, Rafiee S (2018) Comparative energy, economic and environmental analyses of forage production systems for dairy farming. J Clean Prod 182:852–862

Ferreira AF, Ribau JP, Silva CM (2011) Energy consumption and CO2 emissions of potato peel and sugarcane biohydrogen production pathways, applied to Portuguese road transportation. Int J Hydrogen Energy 36:13547–13558.

Ghasemi-Mobtaker H, Akram A, Keyhani A (2012) Energy use and sensitivity analysis of energy inputs for alfalfa production in Iran. Energy Sustain Dev 16:84–89

Ghasemi-Mobtaker H, Kaab A, Rafiee S (2020a) Application of life cycle analysis to assess environmental sustainability of wheat cultivation in the west of Iran. Energy 193:116768.

Ghasemi-Mobtaker H, Keyhani A, Mohammadi A, et al (2010) Sensitivity analysis of energy

inputs for barley production in Hamedan Province of Iran. Agric Ecosyst Environ 137:367–372.

Ghasemi-Mobtaker H, Mostashari-Rad F, Saber Z, et al (2020b) Application of photovoltaic system to modify energy use, environmental damages and cumulative exergy demand of two irrigation systems-A case study: Barley production of Iran. Renew Energy 160:1316–1334.

Ghasemi Mobtaker H, Akram A, Keyhani A (2010) Economic modeling and sensitivity analysis of the costs of inputs for alfalfa production In Iran : A case study from Hamedan province. Ozean J Appl Sci 3:313–319

Grados D, Schrevens E (2019) Multidimensional analysis of environmental impacts from potato agricultural production in the Peruvian Central Andes. Sci Total Environ 663:927–934.

Hasler K, Bröring S, Omta SWF, Olfs H-W (2015) Life cycle assessment (LCA) of different fertilizer product types. Eur J Agron 69:41–51

Hatirli SA, Ozkan B, Fert C (2006) Energy inputs and crop yield relationship in greenhouse tomato production. Renew Energy 31:427–438

Justesen KK, Andreasen SJ, Sahlin SL (2015) Modeling of a HTPEM fuel cell using Adaptive Neuro-Fuzzy Inference Systems. Int J Hydrogen Energy 40:16814–16819.

Kaab A, Sharifi M, Mobli H, et al (2019a) Combined life cycle assessment and artificial intelligence for prediction of output energy and environmental impacts of sugarcane production. Sci Total Environ 664:1005–1019

Kaab A, Sharifi M, Mobli H, et al (2019b) Use of optimization techniques for energy use efficiency and environmental life cycle assessment modification in sugarcane production. Energy 181:1298–1320.

Kalogirou S, Bojic M (2000) Artificial neural networks for the prediction of the energy consumption of a passive solar building. Energy 25:479–491.

Khakbazan M, Mohr RM, Derksen DA, et al (2009) Effects of alternative management practices on the economics, energy and GHG emissions of a wheat-pea cropping system in the Canadian prairies. Soil Tillage Res 104:30–38.

Khanali M, Mobli H, Hosseinzadeh-Bandbafha H (2017) Modeling of yield and environmental impact categories in tea processing units based on artificial neural networks. Environ Sci Pollut Res 24:26324–26340

Khashei-Siuki A, Kouchakzadeh M, Ghahraman B (2011) Predicting Dryland Wheat Yield from Meteorological Data Using Expert System, Khorasan Province, Iran. Journal of Agricultural Science and Technology

Khoshnevisan B, Rafiee S, Iqbal J, et al (2015) A Comparative Study Between Artificial Neural Networks and Adaptive Neuro-Fuzzy Inference Systems for Modeling Energy Consumption in Greenhouse Tomato Production: A Case Study in Isfahan Province. Journal of Agricultural Science and Technology

Khoshnevisan B, Rafiee S, Mousazadeh H (2013) Environmental impact assessment of open field and greenhouse strawberry production. Eur J Agron 50:29–37.

Khoshnevisan B, Rafiee S, Omid M, et al (2014) Environmental impact assessment of tomato and cucumber cultivation in greenhouses using life cycle assessment and adaptive neuro-fuzzy inference system. J Clean Prod 73:183–192.

Khoshroo A, Emrouznejad A, Ghaffarizadeh A, et al (2018) Sensitivity analysis of energy inputs in crop production using artificial neural networks. J Clean Prod 197:992–998.

Liu J, Feng H, He J, et al (2019) Modeling wheat nutritional quality with a modified CERES-wheat model. Eur J Agron 109:125901.

Mälkki H, Alanne K (2017) An overview of life cycle assessment (LCA) and research-based teaching in renewable and sustainable energy education. Renew Sustain Energy Rev 69:218–231

Meng X, Chen L, Cai J, et al (2015) A land use regression model for estimating the NO2 concentration in shanghai, China. Environ Res 137:308–315.

Mensour ON, El Ghazzani B, Hlimi B, Ihlal A (2017) Modeling of solar energy potential in Souss-Massa area-Morocco, using intelligence Artificial Neural Networks (ANNs). In: Energy Procedia. Elsevier Ltd, pp 778–784

Ministry of Jihad-e-Agriculture of Iran (2019) Annual Agricultural Statistics. www.maj.ir (in Persian).

Mohammadi A, Rafiee S, Jafari A, et al (2015) Joint Life Cycle Assessment and Data Envelopment Analysis for the benchmarking of environmental impacts in rice paddy production. J Clean Prod 106:521–532

Mohammadi A, Rafiee S, Jafari A, et al (2014) Energy use efficiency and greenhouse gas emissions of farming systems in north Iran. Renew Sustain Energy Rev 30:724–733

Mohammadi A, Rafiee S, Mohtasebi SS, et al (2010a) Developing an artificial neural network model for predicting kiwifruit production in Mazandaran province of Iran. In: Agriculture Engineering Conference. pp 16–20

Mohammadi A, Rafiee S, Mohtasebi SS, Rafiee H (2010b) Energy inputs–yield relationship and cost analysis of kiwifruit production in Iran. Renew energy 35:1071–1075

Mondani F, Aleagha S, Khoramivafa M, Ghobadi R (2017) Evaluation of greenhouse gases emission based on energy consumption in wheat Agroecosystems. Energy Reports 3:37–45.

Mostashari-Rad F, Ghasemi-Mobtaker H, Taki M, et al (2021) Exergoenvironmental damages assessment of horticultural crops using ReCiPe2016 and cumulative exergy demand frameworks. J Clean Prod 278:123788.

Mousavi-Avval SH, Rafiee S, Sharifi M, et al (2017) Combined application of Life Cycle Assessment and Adaptive Neuro-Fuzzy Inference System for modeling energy and environmental emissions of oilseed production. Renew Sustain Energy Rev 78:807–820.

Nabavi-Pelesaraei A, Abdi R, Rafiee S (2014) Applying artificial neural networks and multi-objective genetic algorithm to modeling and optimization of energy inputs and greenhouse gas emissions for peanut production. Int J Biosci 4:170–183.

Nabavi-Pelesaraei A, Rafiee S, Mohtasebi SS, et al (2018) Integration of artificial intelligence methods and life cycle assessment to predict energy output and environmental impacts of paddy production. Sci Total Environ 631–632:1279–1294.

Nabavi-Pelesaraei A, Rafiee S, Mohtasebi SS, et al (2019) Comprehensive model of energy, environmental impacts and economic in rice milling factories by coupling adaptive neuro-fuzzy inference system and life cycle assessment. J Clean Prod 217:742–756.

Naderloo L, Alimardani R, Omid M, et al (2012) Application of ANFIS to predict crop yield based on different energy inputs. Meas J Int Meas Confed 45:1406–1413.

Ozkan B, Akcaoz H, Fert C (2004) Energy input–output analysis in Turkish agriculture. Renew Energy 29:39–51

Ozkan B, Ceylan RF, Kizilay H (2011) Energy inputs and crop yield relationships in greenhouse winter crop tomato production. Renew Energy 36:3217–3221.

Petković D (2015) Adaptive neuro-fuzzy approach for estimation of wind speed distribution. Int J Electr Power Energy Syst 73:389–392.

590 Raheli H, Rezaei RM, Jadidi MR, Mobtaker HG (2017) A two-stage DEA model to evaluate
591 sustainability and energy efficiency of tomato production. Inf Process Agric 4:342–350.

592 Ranković V, Grujović N, Divac D, et al (2012) Modelling of dam behaviour based on neuro-
593 fuzzy identification. Eng Struct 35:107–113.

594 Recanati F, Arrigoni A, Scaccabarozzi G, et al (2018) LCA Towards Sustainable Agriculture:
595 The Case Study of Cupuaçu Jam from Agroforestry. Procedia CIRP 69:557–561.

596 Romero-Gámez M, Audsley E, Suárez-Rey EM (2014) Life cycle assessment of cultivating
597 lettuce and escarole in Spain. J Clean Prod 73:193–203.

598 Salehi M, Ebrahimi R, Maleki A, Ghasemi Mobtaker H (2014) An assessment of energy
599 modeling and input costs for greenhouse button mushroom production in Iran. J Clean
600 Prod 64:377–383.

601 Singh H, Mishra D, Nahar NM (2002) Energy use pattern in production agriculture of a
602 typical village in arid zone, India—part I. Energy Convers Manag 43:2275–2286.

603 Singh H, Singh AK, Kushwaha HL, Singh A (2007) Energy consumption pattern of wheat
604 production in India. Energy 32:1848–1854.

605 Singh R, Kainthola A, Singh TN (2012) Estimation of elastic constant of rocks using an
606 ANFIS approach. Appl Soft Comput 12:40–45

607 Soltanali H, Nikkhah A, Rohani A (2017) Energy audit of Iranian kiwifruit production using
608 intelligent systems. Energy 139:646–654.

609 Soltani A, Rajabi MH, Zeinali E, Soltani E (2013) Energy inputs and greenhouse gases
610 emissions in wheat production in Gorgan, Iran. Energy 50:54–61.

611 Tabatabaeefar A, Emamzadeh H, Ghasemi Varnamkhasti M, et al (2009) Comparison of
612 energy of tillage systems in wheat production. Energy 34:41–45.

Taheri-Rad A, Khojastehpour M, Rohani A, et al (2017) Energy flow modeling and predicting the yield of Iranian paddy cultivars using artificial neural networks. Energy 135:405–412.

Taki M, Abdi R, Akbarpour M, Ghasemi-Mobtaker H (2013) Energy inputs - Yield relationship and sensitivity analysis for tomato greenhouse production in Iran. Agric Eng Int CIGR J 15:59–67

Taki M, Ajabshirchi Y, Mahmoudi A (2012a) Prediction of output energy for wheat production using artificial neural networks in Esfahan province of Iran. J Agric Technol 8:1229–1242

Taki M, Ajabshirchi Y, Ranjbar SF, et al (2016) Heat transfer and MLP neural network models to predict inside environment variables and energy lost in a semi-solar greenhouse. Energy Build 110:314–329.

Taki M, Mahmoudi A, Ghasemi-Mobtaker H, Rahbari H (2012b) Energy consumption and modeling of output energy with multilayer feed-forward neural network for corn silage in Iran. Agric Eng Int CIGR J 14:93–101

Tonini D, Astrup T (2012) Life-cycle assessment of a waste refinery process for enzymatic treatment of municipal solid waste. Waste Manag 32:165–176

Zangeneh M, Omid M, Akram A (2010) A comparative study on energy use and cost analysis of potato production under different farming technologies in Hamadan province of Iran. Energy 35:2927–2933

Zangeneh M, Omid M, Akram A (2011) A comparative study between parametric and artificial neural networks approaches for economical assessment of potato production in Iran. Spanish J Agric Res 3:661–671

Figures

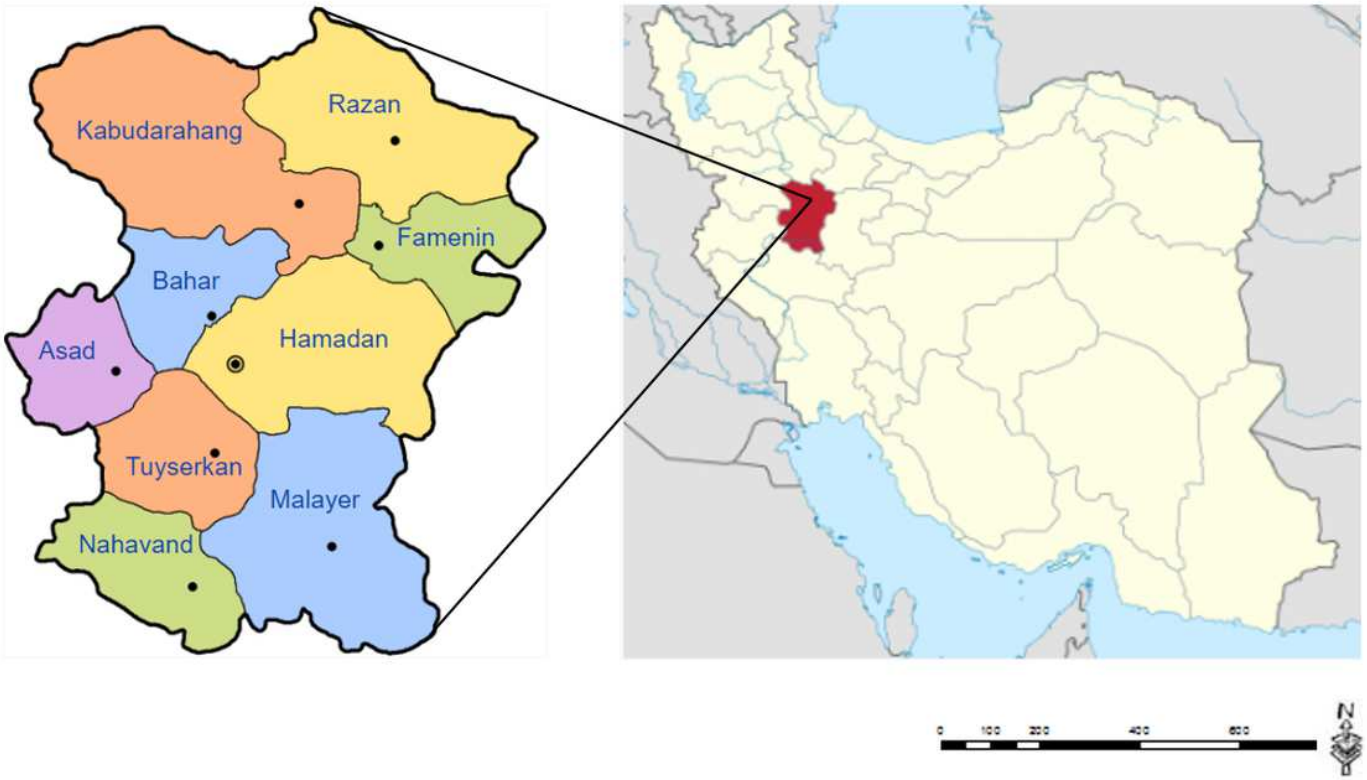

Figure 1

Geographical location of the Hamedan province Note: The designations employed and the presentation of the material on this map do not imply the expression of any opinion whatsoever on the part of Research Square concerning the legal status of any country, territory, city or area or of its authorities, or concerning the delimitation of its frontiers or boundaries. This map has been provided by the authors.

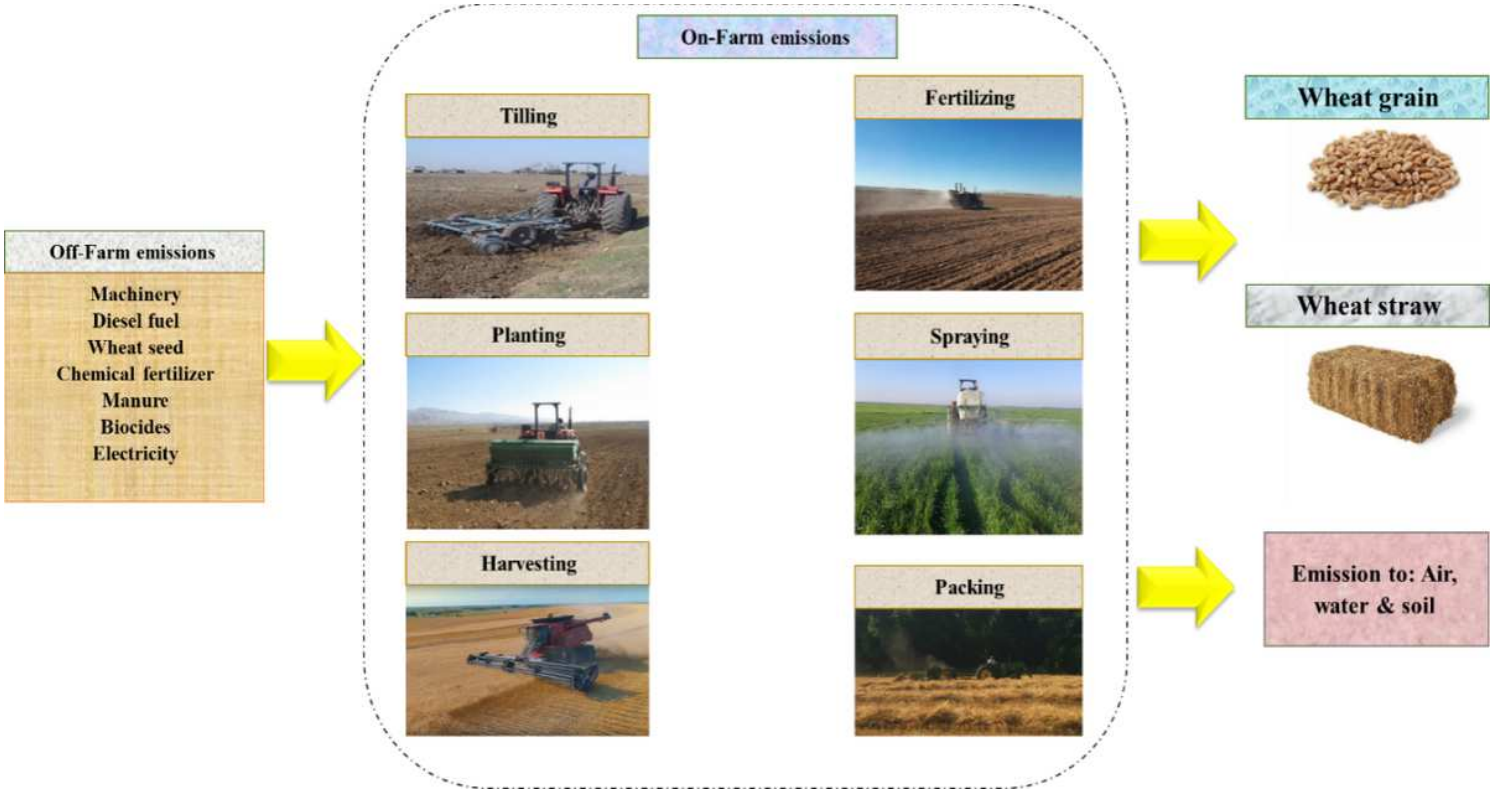

Figure 2

System boundaries of wheat production in Hamedan province of Iran.

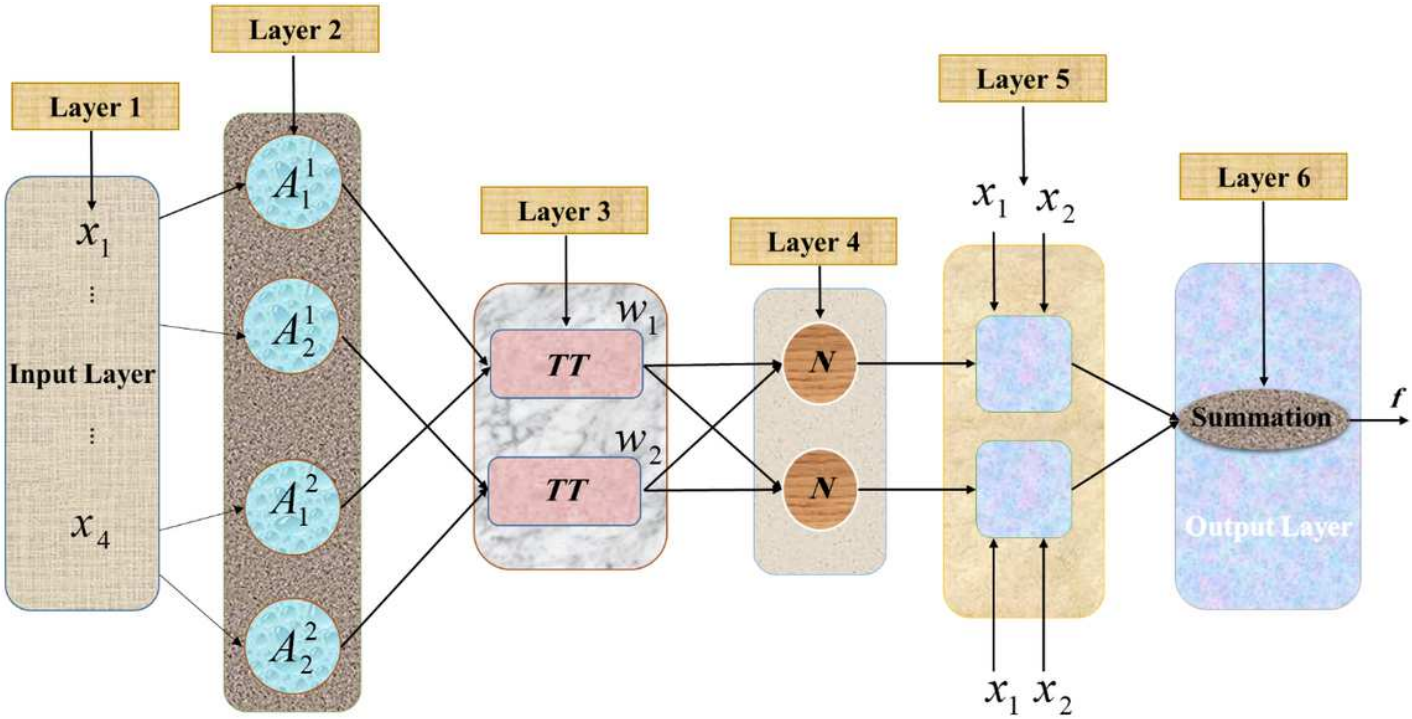

Figure 3

The ANFIS model structure.

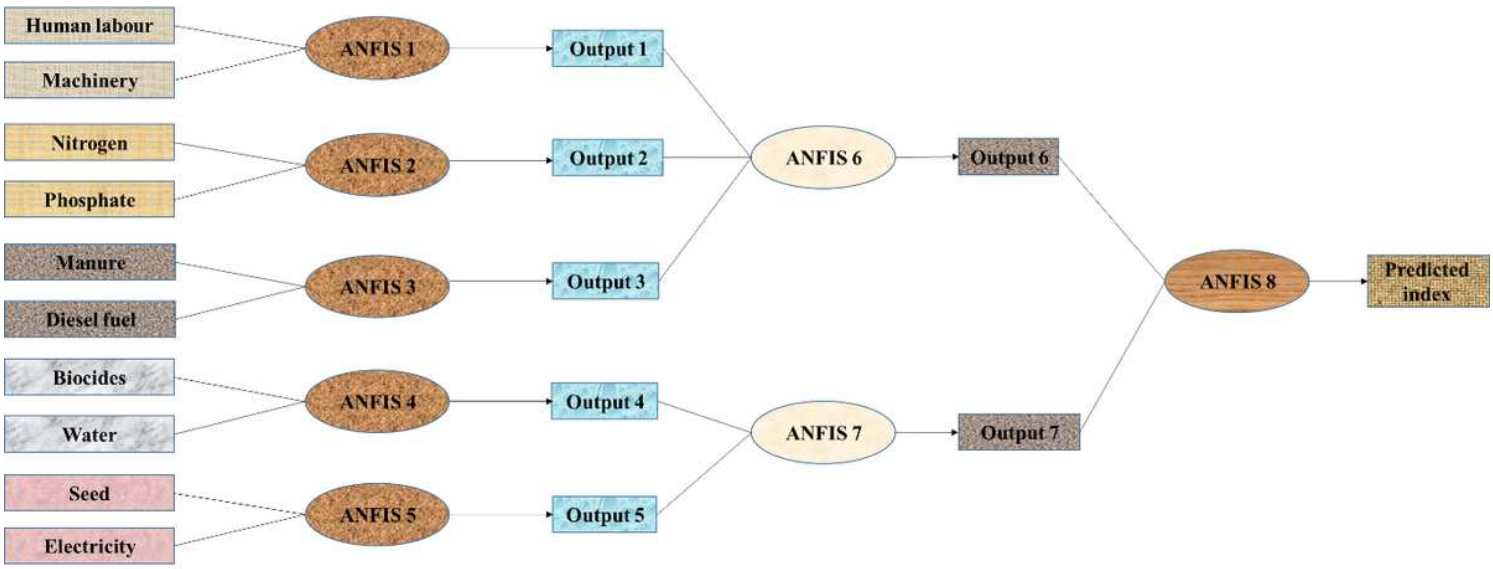

Figure 4

3-level ANFIS structure to forecast wheat yield, economical profit, and GWP of wheat cultivation.

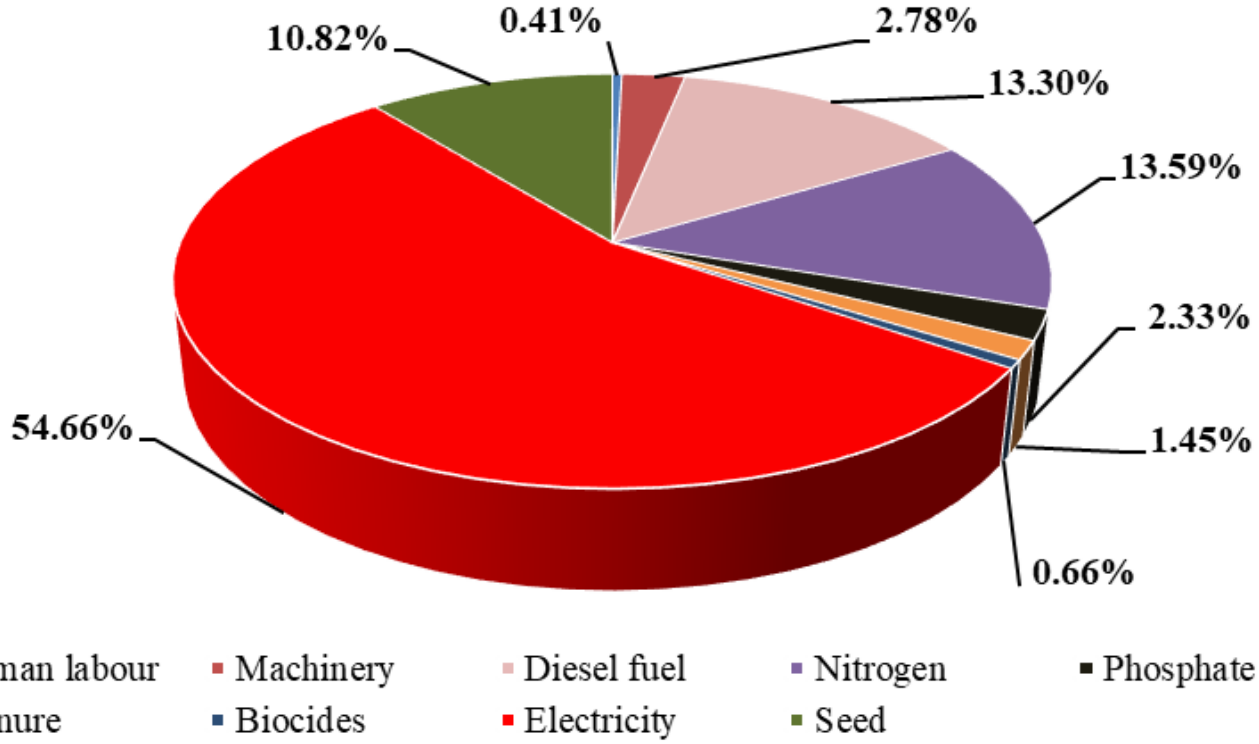

Figure 5

The energy input quota for wheat production in study region.

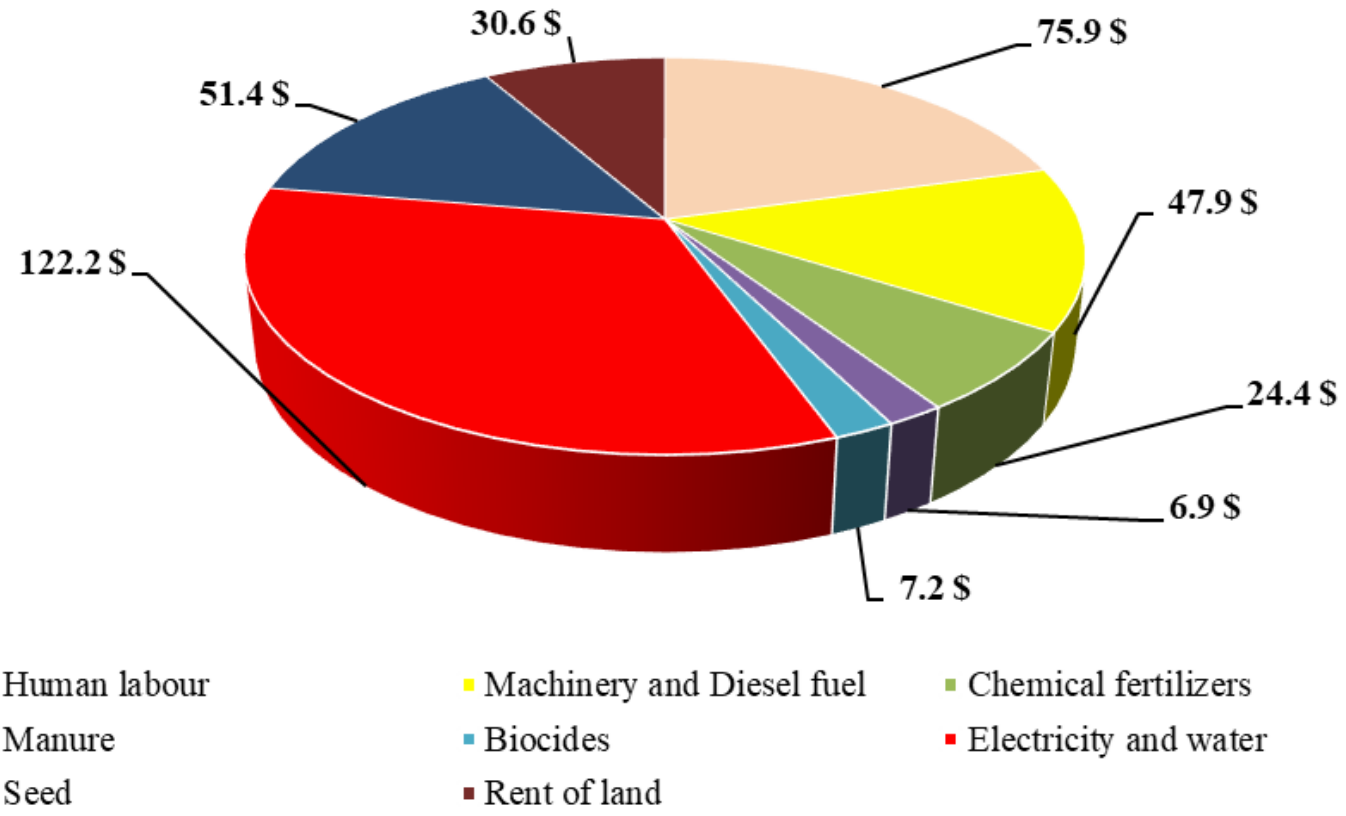

Figure 6

The percent of input costs for wheat cultivation in study region.

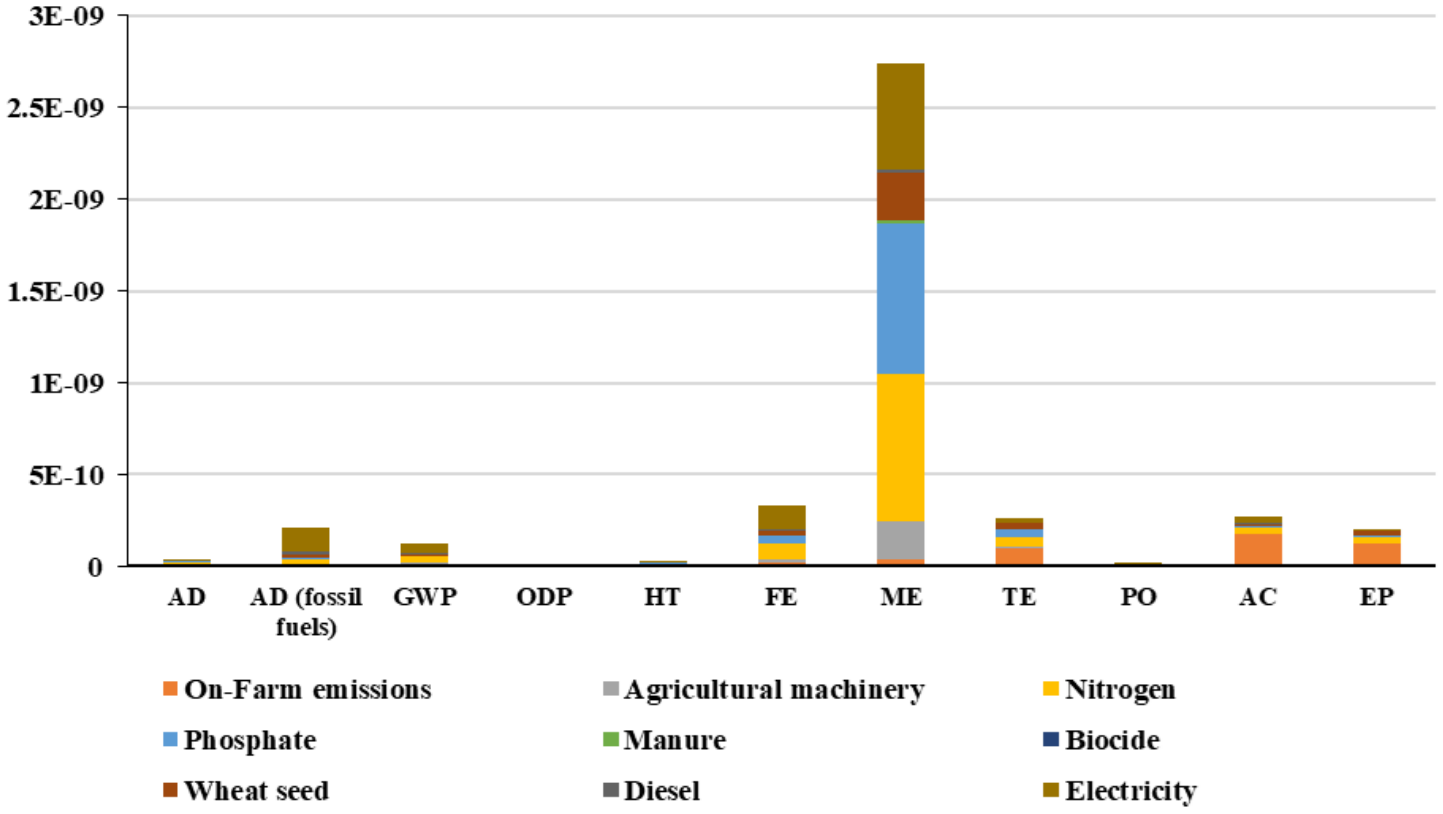

Figure 7

Normalization of different inputs in the environmental impact categories for wheat production.

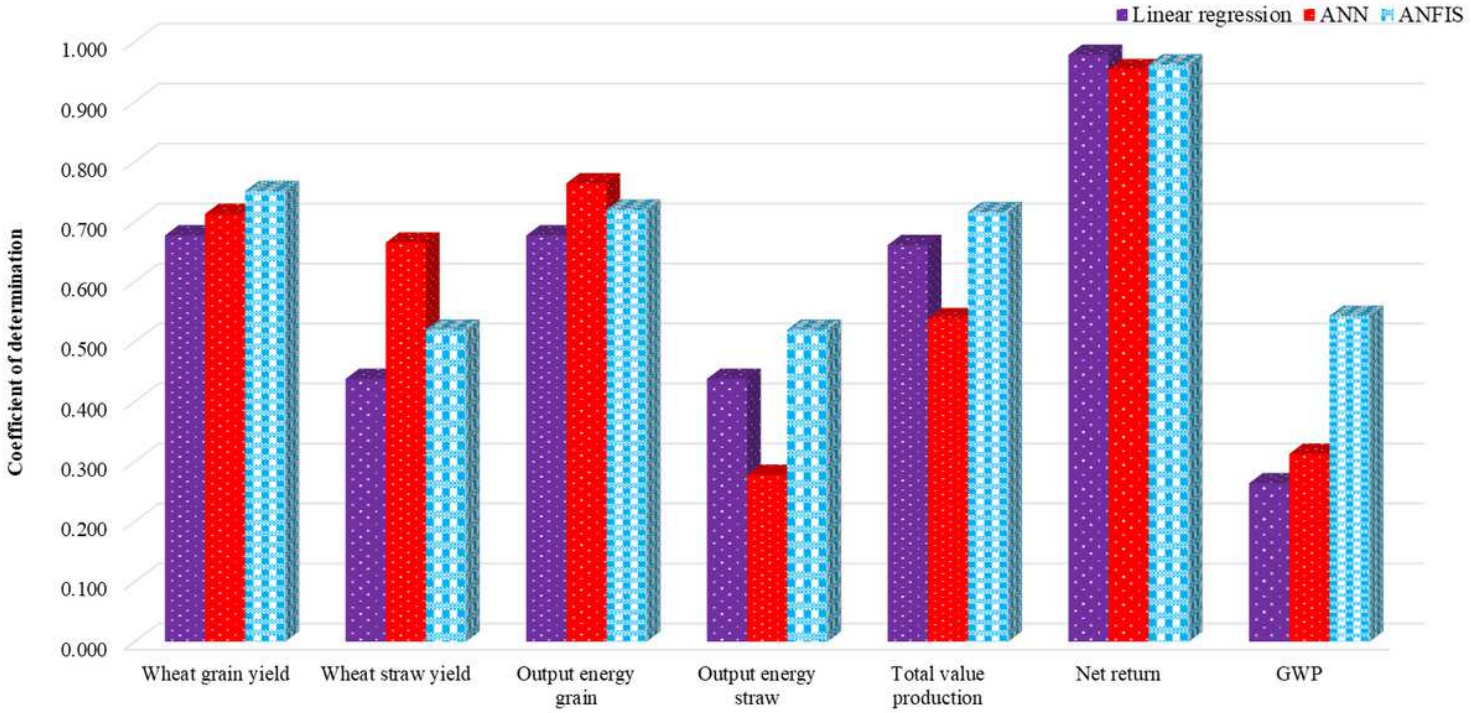

Figure 8

Comparison between R2 in different models.

Supplementary Files

This is a list of supplementary files associated with this preprint. Click to download.

- GharghicalAbstract.docx
- Highlights.docx