# Research on Influencing Factors of Artificial Intelligence Multi-cloud Scheduling Applied Talents Training based on DEMATEL-TAISM

**Yi-jie Bian**
Hohai University

**Lu Xie** ( xie_lu97@163.com )
Hohai University

**Jing-qi Li**
Hohai University

**Research Article**

**Keywords:** Internet of things, Multi-cloud scheduling, Applied talents, Personnel training, DEMATEL-TAISM

**Posted Date:** June 22nd, 2022

**DOI:** https://doi.org/10.21203/rs.3.rs-1752081/v1

# Research on Influencing Factors of Artificial Intelligence Multi-cloud Scheduling Applied Talents Training based on DEMATEL-TAISM

Yi-jie Bian[1], Lu Xie[1*] & Jing-qi Li[1]

[*]Correspondence:xie_lu97@163.com

[1]Institute of Management Science and Information Management, Business School, Hohai University, Nanjing, 211100, PR China

**Abstract**

With the rapid development of Internet of things (IoT) technology and the increasing popularity of IoT devices, more and more computing intensive IoT applications came into being. However, due to the limited resources of IoT devices, cloud computing systems are required to compute intensive IoT applications. Further, in order to be subject to a single cloud computing service provider, multi-cloud computing will become an IoT service cloud computing solution. In view of the complexity of multi-cloud scheduling, the application of artificial intelligence will be an important technology to solve the multi-cloud scheduling of IoT. The corresponding talent training plays an important role in the development and implementation of the artificial intelligence multi-cloud scheduling of IoT. Firstly, this paper studies the key influencing factors of IoT's artificial intelligence multi-cloud scheduling applied talents training. Combined with the characteristics of the development of China's artificial intelligence industry, this paper summarizes the influencing factors from the four dimensional training path of government departments, universities, enterprises and scientific research institutes. According to the training purpose of artificial intelligence multi-cloud scheduling applied talents training, build an artificial intelligence multi-cloud scheduling applied

talents training influencing factor index system. Then, the DEMATEL method is used to establish multiple correlation matrices according to the direct influence correlation between the factors, and calculate the influence degree, affected degree, center degree and cause degree of the factors; Using the improved AISM method, based on the idea of game confrontation, from the two opposite extraction rules of result priority and cause priority respectively, a group of confrontation level topological maps with comprehensive influence values reflecting the interaction of factors are obtained, and relevant suggestions are put forward in order to provide reference for the training of artificial intelligence multi-cloud scheduling applied talents.

**Key words:** Internet of things; Multi-cloud scheduling; Applied talents; Personnel training; DEMATEL-TAISM

## 1. Introduction

In recent years, the development of IoT related technologies has gradually increased the application scenarios of the IoT in production and life. With the continuous expansion of the application scenarios of the IoT and the rapid development of the commercial landing process of the IoT, on the one hand, the demand for artificial intelligence related technical support of the IoT has increased sharply, on the other hand, the demand for more resources has also increased, a single cloud service provider can no longer meet the needs of customers. In a multi-cloud environment, different service providers provide more heterogeneous resources to complete the tasks submitted by cloud customers. Therefore, the design of task scheduling scheme in a multi-cloud environment, that is, efficient resource management, is a challenging problem [1-3]. In the face of this challenging problem, the demand for technical talents related to artificial intelligence multi-cloud scheduling is increasing, which further leads to the change of post setting, talent demand and employment situation in the labor and employment market. Therefore, for the global artificial intelligence competition, talent competition is the core content. The ability and level of talent training will have an important impact on the development of the national artificial intelligence industry. The rapid development of artificial intelligence technology is bound to bring about profound changes in talent training. The talent training of relevant talents is not only to teach the knowledge and technology related to artificial intelligence, but also to cultivate comprehensive and all-round applied talents that meet the needs of society [4].

Grover (2013), Chen (2017) and Huang et al. (2022) studies have shown that, in view of the strong comprehensibility and applicability of artificial intelligence, the demand for artificial intelligence compound talents in new positions is strengthened, which imperceptibly promotes the exploration and reform of innovative talent training mode in higher education institutions. It has

also promoted the transformation of engineering talent training to the goals of intelligence, automation, humanization and precision[5-8]. Wang et al. (2018) argue that although the development of artificial intelligence will replace existing jobs effect, but also create new jobs and employment opportunities for the talent market and improve job quality[9], such as the market in recent years, artificial intelligence algorithm engineer, data architects, artificial intelligence product managers, and other high-end technical talent positions. Jun (2017) studied the training of human resource management professionals in the context of artificial intelligence[10]. Liu et al. (2019) practiced and explored management accounting talent training under the background of big data and artificial intelligence, in order to integrate with big data, artificial intelligence, cloud computing and other information technologies, and promote professional informatization into a new stage[11]. Feng (2020) steadily integrates artificial intelligence into the mode of translation talent training, greatly innovating the concepts and methods of College English translation teaching in China, in order to continuously improve the quality of talent training[12]. Oberc (2020) and Chen (2021) discussed practical learning methods in factories and the possibility of bringing artificial intelligence closer to workers by teaching supervised machine learning training[13-14]. Wang et al. (2018) presented the demand analysis of artificial intelligence talents, indicating that applied talents are at the bottom of the artificial intelligence talent system, but the number is the largest, which is the indispensable foundation for artificial intelligence practice[4].

At present, the training of artificial intelligence talents in China still lags behind the international level, so the research on artificial intelligence talent training is essential. In 2018, the Ministry of Education officially put forward the interdisciplinary talent training mode of “artificial intelligence+X”, which promoted the specialty setting of “new engineering” disciplines and

influenced its future development trend. Fang (2019) study shows that, led by iFLYTEK, technology and Internet giants such as Tencent, Baidu, and Huawei have carried out joint talent training with some colleges and universities in my country, and jointly established the School of Artificial Intelligence, the Institute of Artificial Intelligence, Laboratories, etc., train artificial intelligence professionals that enterprises really need[15]. Zhao et al. (2019) pointed out the dilemma of the reform of higher education talent training mode in the era of artificial intelligence: the evaluation system of higher education talent training is relatively backward, and the improvement of the evaluation system of higher education talent training needs to be promoted orderly[16]. Geng et al. (2020) expounded that world-class universities should focus on training artificial intelligence talents with a broad base and wide caliber, attaching importance to the training of artificial intelligence talents' practical ability, and attaching importance to the training of artificial intelligence talents' interdisciplinary ability[17].

To sum up, it can be found that domestic and foreign scholars' researches on artificial intelligence and applied talents training are independent of each field. Most of them start from the application and development of artificial intelligence in traditional disciplines or industries, and focus more on discipline or industry construction; Even if there are researches related to artificial intelligence talent training, they are all broad descriptions of industry talent training, and have not been refined to artificial intelligence application talents. The research on the influencing factors of artificial intelligence talent training has been constantly optimized with the development of economy and society. Most of the previous studies were from a single perspective and did not detail applied talents. Most of the research methods were qualitative research, but few were quantitative research.

Therefore, by sorting out the existing empirical research conclusions, this paper screened out a series of factors that affect the training of applied talents in artificial intelligence multi-cloud scheduling, sorted out the relevant research results, and systematically summarized and integrated the influencing factors of the training of applied talents in artificial intelligence multi-cloud scheduling through expert interviews and questionnaires, so as to build the influencing factor system of artificial intelligence multi-cloud scheduling applied talent training. Combining a variety of mathematical models to quantitatively analyze the influencing factors of artificial intelligence multi-cloud scheduling applied talents training, that is, through the decision laboratory analysis method (DEMATEL) and the improved confrontational explanation structural model (TAISM), the key factors are identified from multiple perspectives, such as the causal relationship between factors and the hierarchical structure integrated with the idea of game confrontation. It also studies the hierarchical structure and relationship among the influencing factors within the system, which provides a basis for the government to formulate policies and promote the rapid development of China's artificial intelligence industry. At the same time, it has important theoretical reference and strong application value for the scheduling problem in the cloud environment to improve the efficiency of cloud resource scheduling.

## 2. Concept definition and influence factors

### 2.1 Multi-cloud scheduling

Multi-cloud includes multiple independent clouds, which are not connected voluntarily and are not shared with virtual resources[18]. Therefore, in such an environment, it is the customer's responsibility to manage the supply and scheduling of virtual resources. In this case, customers can

access the multi-cloud environment by using services hosted externally or internally by the cloud client [19]. Compared with the traditional single cloud environment, the multi-cloud environment has the following advantages: performance guarantee: service performance can be maintained by using resources from other cloud service providers in the multi-cloud. Availability: the geographical distribution of different service providers in a multi-cloud environment allows the migration of businesses, virtual machines and data, and improves the availability of businesses[20]. Diversified customer needs: maintaining customer satisfaction is very important to improve customer experience. The heterogeneous nature of different service providers provides customers with diversified services. Regional workload: due to geographical dispersion, the workload can be redirected to the cloud closer to the customer[21]. Convenience: through the unified visualization of various available services, it provides customers with the convenience of relevant services. In order to meet the business needs during peak hours and more effectively deal with massive data problems, the optimization of task scheduling performance in a multi-cloud environment can better meet the needs of customers and service providers. Therefore, the training of applied talents for multi-cloud scheduling is also the current development trend [22].

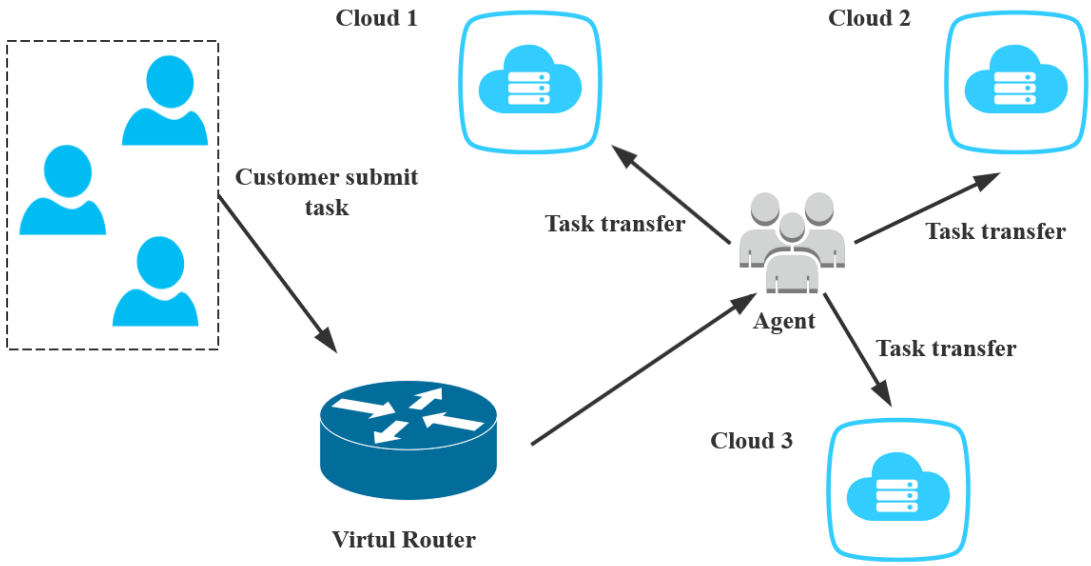

**Fig.1. Task scheduling process in multi-cloud environment**

## 2.2 Applied talents

According to China's national conditions, the classification scheme of colleges and universities in UNESCO's "International Standard Classification of Education" is in line with the current situation of my country's education and talent structure, and is more likely to be recognized by people[23-24]. In the plan, colleges and universities are divided into: academic research-oriented universities which are devoted to training academic innovation and research theory-related talents; skilled colleges and universities (higher vocational colleges), which are dedicated to training talents related to crafts, practical operations, and technical industries; application-oriented universities, which are effective in training between academic research-oriented and skill-oriented, and adapt to the development needs of majors and industries. The school is more practical and comprehensive. We refer to the talents trained by these three types of colleges as research talents, skilled talents and applied talents accordingly. From the above three types of talents, it can be seen that the training of multi-cloud scheduling applied talents achieves "specialization and practicality" and "theoretical research" complement each other, and pays attention to "the comprehensive ability and practical ability to comprehensively apply theoretical knowledge and methods to solve practical problems" [25].

## 2.3 Construction of Influencing Factor System

Based on the existing domestic and foreign research results and the development status of applied talents training at home and abroad, focusing on the needs of artificial intelligence and multi-cloud scheduling, the potential influencing factors of applied talents training in artificial intelligence

multi-cloud scheduling industry are summarized from the four-in-one multi-dimensional training path of government departments, universities, enterprises and research institutes (politics, education, production and research) [26-28]. And through the questionnaire investigation and expert consultation method changes continuously optimize the index system, finally qualitative identify artificial intelligence multi-cloud scheduling applied talents training index system of influencing factors.

Colleges and universities determine the trend of talent training to a certain extent, and the professional degree of faculty structure is a key factor in the process of talent training. At the same time, in this paper, the factor of training base construction and education integration is regarded as a college-level factor to facilitate research, and finally summarizes four factors at the level of colleges and universities. As the most important influencer in the training of multi-cloud scheduling applied talents, enterprises can coordinate the reasonable operation of other parties in the demand and management of artificial intelligence talents. Mainly through the management and development system of talents within the enterprise and the training promotion and incentive mechanism to strengthen the effective promotion of talent training, and finally summarize five factors at the enterprise level; The degree of social support for the artificial intelligence industry is related to the efficient and rapid development and implementation of the training work at the level of universities and enterprises. It affects the training and development intention of colleges and individuals to a great extent, and finally summarizes five factors at the social level. Talent training is a complex system, in which the characteristics of talent itself is an indispensable factor. Finally, four factors at the personal level are summarized. According to the above analysis, the influencing factors of artificial intelligence multi-cloud scheduling applied talent training mainly come from four levels:

colleges, enterprises, society and individuals, including 21 factors such as the investment cost of enterprise applied talents training, the proportion of industrial investment in GDP and the height of career goals [29-33]. See Table 1 for details.

**Table 1. Index System of influencing factors for training applied talents of artificial intelligence multi-cloud scheduling**

| Indicator classification | First-level index | Second-level index |
|---|---|---|
| Affecting factor system of artificial intelligence multi-cloud scheduling applied talents training | A1: College level | B11: Professional degree of teacher structure |
| | | B12: Experimental equipment and technical capabilities |
| | | B13: Practical training base construction and education integration degree |
| | | B14: Professional re-education intensity |
| | A2: Enterprise level | B21: Talent management and development system |
| | | B22: Applied talents training investment cost |
| | | B23: Corporate social responsibility |
| | | B24: Degree of participation in industry-university-research education |
| | | B25: Training promotion and incentive mechanism |
| | A3: Social level | B31: Supportive Policy and Strategic Impact |
| | | B32: Special fund reward and subsidy standard |
| | | B33: Artificial intelligence major and School evaluation |
| | | B34: Industry R&D and innovation support |
| | | B35: Proportion of industrial investment in GDP |
| | A4: Individual level | B41: Individual characteristics |
| | | B42: Career goals height |
| | | B43: Innovative self-efficacy |
| | | B44: Awareness of industry and corporate standards |

# 3. Construction of DEMATEL-TAISM model

## 3.1 Model selection

Huang (2003) said that ISM is one of the important methods in educational technology research. Based on hacker and anti-hacker thinking, he proposed five improved ISM methods and elaborated them in detail, bringing enlightenment to the application and expansion of ISM model [34]. Zhou and Zhang (2008) proposed the integration of DEMATEL/ISM to construct system hierarchy, and provided the theoretical basis and algorithm of method integration. Effective integration of DEMATEL/ISM method can reduce the computational amount and complexity of reachable matrix,

providing a new idea for the analysis and decision-making of complex systems [35]. Xie (2019) first proposed the adversarial interpretation structural model method, the AISM method. This study uses TOPSIS-AISM to analyze 8 evaluation objects and 19 dimensions of indicators, and finally uses four sets of hierarchical topological maps to indicate the entire evaluation process [36]. Based on the above methods, this study adds the comprehensive influence value, namely the TAISM method, on the basis of AISM, so that the topological result graph can more clearly and intuitively show the influence relationship of the elements in the system.

Based on the above influencing factor system of applied talents training of artificial intelligence multi-cloud scheduling, first calculate the matrix through the DEMATEL method to obtain the Degree of Influence, Degree of Influence, Degree of Cause and Center of each factor. Combined with the causal relationship diagram of factors, the key influencing factors of artificial intelligence multi-cloud scheduling applied talents training are identified. The comprehensive influence matrix calculated by the DEMATEL method can directly calculate the reachable matrix; According to the reachable matrix and the TAISM method, a set of adversarial directed topological hierarchy graphs with comprehensive influence values can be obtained. Therefore, the combined use of DEMATEL-TAISM model can identify and evaluate key factors in complex systems, and clarify the structural levels of factors in the system. Proceed as follows:

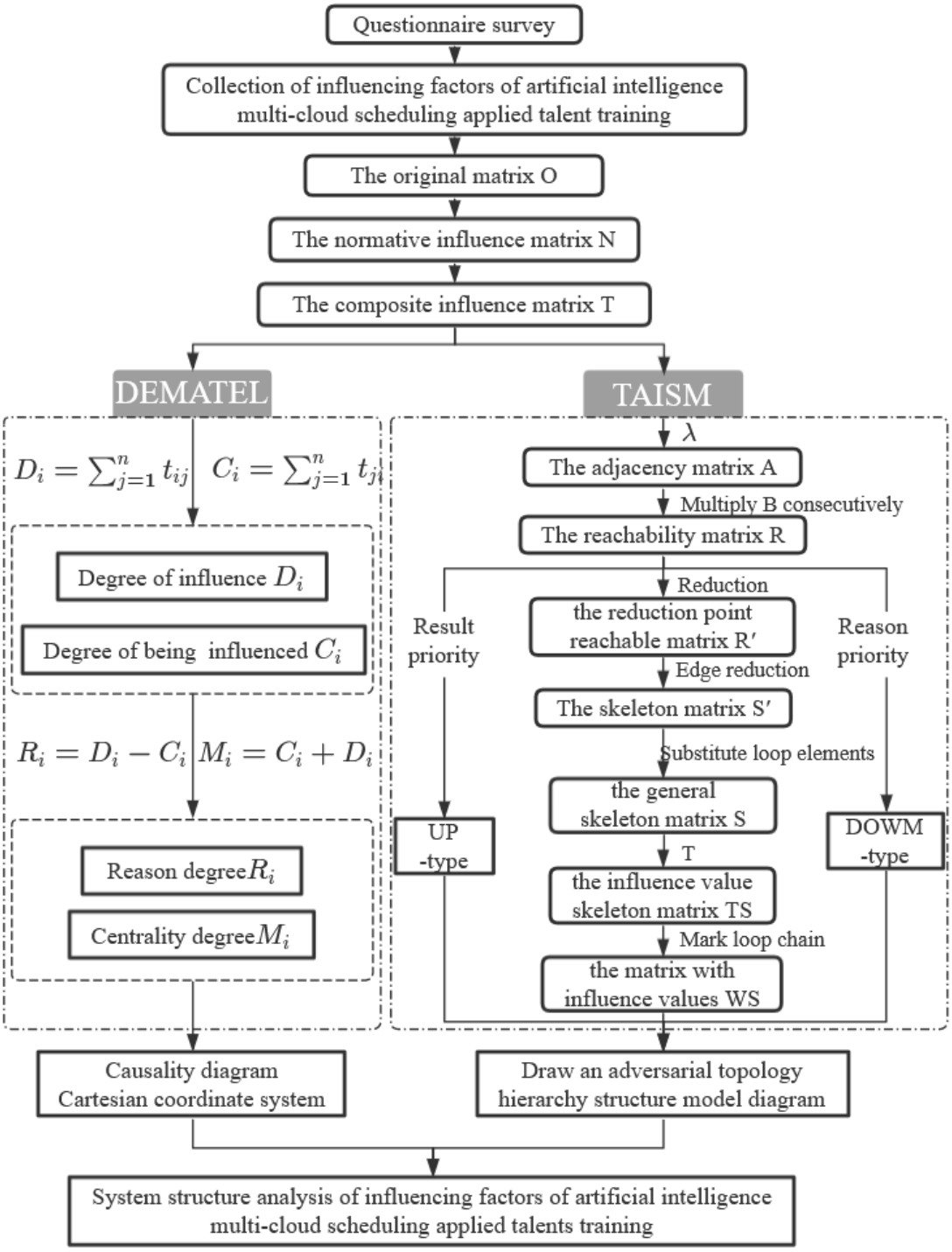


**Fig.2. DEMATEL-TAISM method flow chart**

## 3.2 DEMATEL method

### *3.2.1 Build the original matrix O*

Through questionnaires and interviews, experts are asked to quantify and score the mutual influence

relationship among the factors in the multi-dimensional index system affecting the training of artificial intelligence multi-cloud scheduling applied talents, where 0 means no influence, 1 means weak influence, 2 means general influence, 3 means strong influence and 4 means stronger influence. The research objects involved in expert fields include 3 professors and associate professors of artificial intelligence in applied universities, 2 personnel and senior executives of artificial intelligence companies, and 1 practitioner in artificial intelligence industry; After all the expert scoring forms are recovered, the scores are summarized, and the sum of quantitative influence relationships in the six scoring forms is calculated. Determining the relationship between factors and the relationship between direct influence degree $S_i(i = 1,2\ldots18)$ and $S_j(j = 1,2\ldots18)$ is represented by $o_{ij}$, $o_{ij}$ is the strength of the influence of $i$ factor on factor $j$, and $O(o_{ij})_{18\times18}$ is the direct influence matrix.

### *3.2.2 Calculate the composite influence matrix T*

Normalize the direct influence matrix *O* by the row sum maximum method to obtain the normative influence matrix *N*, and the calculation process is shown in formula 1:

$$N = \left(\frac{o_{ij}}{Maxvar}\right)_{18\times18} \quad (1)$$

Where $Maxvar = max\left(\sum_{j=1}^{n} o_{ij}\right)$.

Using the obtained standardized influence matrix and formula (2), the comprehensive influence matrix *T* of the influencing factors of artificial intelligence multi-cloud scheduling applied talents training is obtained, that is $T = \left(t_{ij}\right)_{18\times18}$.

$$T = N + N^2 + N^3 + \cdots + N^k = \sum_{k=1}^{\infty} N^k \rightarrow T = N(I - N)^{-1} \quad (2)$$

Where *I* is the identity matrix; A is the inverse matrix of B. From this, the composite influence

matrix $T$ is shown in Table 2.

**Table 2. Composite influence matrix $T$**

T=

| $M_{18\times18}$ | B11 | B12 | B13 | B14 | B21 | B22 | B23 | B24 | B25 | B31 | B32 | B33 | B34 | B35 | B41 | B42 | B43 | B44 |
|---|---|---|---|---|---|---|---|---|---|---|---|---|---|---|---|---|---|---|
| **B11** | 0.052 | 0.118 | 0.133 | 0.153 | 0.132 | 0.193 | 0.11 | 0.149 | 0.082 | 0.055 | 0.104 | 0.135 | 0.108 | 0.094 | 0.149 | 0.18 | 0.168 | 0.147 |
| **B12** | 0.087 | 0.055 | 0.115 | 0.085 | 0.071 | 0.104 | 0.078 | 0.101 | 0.049 | 0.034 | 0.05 | 0.119 | 0.11 | 0.072 | 0.101 | 0.122 | 0.123 | 0.104 |
| **B13** | 0.084 | 0.112 | 0.069 | 0.104 | 0.098 | 0.127 | 0.104 | 0.137 | 0.067 | 0.048 | 0.08 | 0.112 | 0.123 | 0.082 | 0.106 | 0.138 | 0.137 | 0.118 |
| **B14** | 0.036 | 0.086 | 0.084 | 0.062 | 0.099 | 0.124 | 0.096 | 0.121 | 0.088 | 0.033 | 0.053 | 0.08 | 0.089 | 0.065 | 0.131 | 0.155 | 0.139 | 0.127 |
| **B21** | 0.081 | 0.111 | 0.142 | 0.141 | 0.107 | 0.198 | 0.135 | 0.187 | 0.159 | 0.067 | 0.069 | 0.127 | 0.15 | 0.11 | 0.191 | 0.244 | 0.224 | 0.202 |
| **B22** | 0.099 | 0.156 | 0.172 | 0.193 | 0.191 | 0.152 | 0.134 | 0.203 | 0.139 | 0.093 | 0.097 | 0.133 | 0.207 | 0.154 | 0.191 | 0.247 | 0.225 | 0.209 |
| **B23** | 0.05 | 0.064 | 0.094 | 0.099 | 0.12 | 0.155 | 0.066 | 0.133 | 0.113 | 0.081 | 0.079 | 0.07 | 0.135 | 0.101 | 0.12 | 0.147 | 0.112 | 0.163 |
| **B24** | 0.074 | 0.114 | 0.129 | 0.117 | 0.138 | 0.184 | 0.132 | 0.098 | 0.098 | 0.071 | 0.079 | 0.099 | 0.139 | 0.108 | 0.132 | 0.185 | 0.143 | 0.17 |
| **B25** | 0.061 | 0.094 | 0.123 | 0.146 | 0.15 | 0.172 | 0.087 | 0.128 | 0.072 | 0.039 | 0.046 | 0.089 | 0.106 | 0.085 | 0.171 | 0.218 | 0.209 | 0.177 |
| **B31** | 0.102 | 0.136 | 0.152 | 0.166 | 0.189 | 0.212 | 0.161 | 0.191 | 0.135 | 0.067 | 0.157 | 0.16 | 0.212 | 0.16 | 0.201 | 0.251 | 0.197 | 0.205 |
| **B32** | 0.105 | 0.142 | 0.159 | 0.156 | 0.169 | 0.189 | 0.143 | 0.171 | 0.131 | 0.116 | 0.071 | 0.152 | 0.17 | 0.143 | 0.165 | 0.218 | 0.203 | 0.166 |
| **B33** | 0.112 | 0.144 | 0.144 | 0.139 | 0.134 | 0.158 | 0.113 | 0.137 | 0.091 | 0.097 | 0.125 | 0.083 | 0.12 | 0.104 | 0.137 | 0.176 | 0.155 | 0.172 |
| **B34** | 0.076 | 0.119 | 0.126 | 0.131 | 0.136 | 0.183 | 0.111 | 0.136 | 0.118 | 0.089 | 0.09 | 0.097 | 0.096 | 0.128 | 0.155 | 0.196 | 0.199 | 0.169 |
| **B35** | 0.083 | 0.135 | 0.128 | 0.124 | 0.138 | 0.201 | 0.12 | 0.154 | 0.116 | 0.128 | 0.13 | 0.112 | 0.195 | 0.082 | 0.14 | 0.198 | 0.169 | 0.193 |
| **B41** | 0.041 | 0.074 | 0.055 | 0.084 | 0.095 | 0.133 | 0.082 | 0.084 | 0.093 | 0.029 | 0.034 | 0.091 | 0.074 | 0.052 | 0.071 | 0.165 | 0.158 | 0.138 |
| **B42** | 0.037 | 0.053 | 0.058 | 0.077 | 0.096 | 0.102 | 0.062 | 0.108 | 0.087 | 0.025 | 0.03 | 0.078 | 0.052 | 0.039 | 0.105 | 0.085 | 0.164 | 0.138 |
| **B43** | 0.045 | 0.079 | 0.091 | 0.095 | 0.091 | 0.122 | 0.063 | 0.096 | 0.086 | 0.049 | 0.055 | 0.096 | 0.095 | 0.072 | 0.122 | 0.161 | 0.09 | 0.133 |
| **B44** | 0.021 | 0.048 | 0.043 | 0.046 | 0.065 | 0.083 | 0.065 | 0.077 | 0.051 | 0.019 | 0.029 | 0.042 | 0.038 | 0.029 | 0.078 | 0.124 | 0.096 | 0.053 |

### *3.2.3 Calculate the degree of influence $D_i$ and the degree of being influenced $C_i$*

Based on the comprehensive influence matrix $T$, the degree of influence $D_i$ can be obtained by accumulating the values of the rows, and the degree of being influenced $C_i$ of each factor can be obtained by accumulating the values of the columns.

$$D_i = \sum_{j=1}^{n} t_{ij}, 1 \le i \le n \quad (3)$$

$$C_i = \sum_{j=1}^{n} t_{ji}, 1 \le i \le n \quad (4)$$

### *3.2.4 Calculate the centrality degree $M_i$ and reason degree $R_i$*

According to formula (5), the centrality degree $M_i$ is obtained by adding the degree of influence $D_i$ and the degree of being influenced $C_i$ of each influencing factor; According to formula (6), the

reason degree $R_i$ is obtained by subtracting tthe degree of being influenced $C_i$ of each influencing factor from the degree of influence $D_i$.

$$M_i = D_i + C_i \tag{5}$$

$$R_i = D_i - C_i \tag{6}$$

**Table 3. Influence and causality table**

| Factor | $D_i$ | $C_i$ | $M_i$ | Centrality sort | $R_i$ | Positive sort (reason) | Negative sort (result) |
|---|---|---|---|---|---|---|---|
| **B22** | 2.995 | 2.791 | 5.787 | 1 | 0.204 | 8 | |
| **B21** | 2.645 | 2.219 | 4.864 | 2 | 0.426 | 6 | |
| **B24** | 2.209 | 2.411 | 4.62 | 3 | -0.203 | | -2 |
| **B42** | 1.394 | 3.211 | 4.605 | 4 | -1.818 | | -8 |
| **B34** | 2.355 | 2.219 | 4.574 | 5 | 0.135 | 9 | |
| **B43** | 1.642 | 2.91 | 4.552 | 6 | -1.268 | | -6 |
| **B35** | 2.545 | 1.679 | 4.224 | 7 | 0.866 | 4 | |
| **B33** | 2.341 | 1.875 | 4.216 | 8 | 0.466 | 5 | |
| **B31** | 3.052 | 1.14 | 4.192 | 9 | 1.913 | 1 | |
| **B32** | 2.768 | 1.378 | 4.145 | 10 | 1.39 | 2 | |
| **B41** | 1.554 | 2.468 | 4.022 | 11 | -0.914 | | -5 |
| **B25** | 2.173 | 1.775 | 3.948 | 12 | 0.398 | 7 | |
| **B13** | 1.846 | 2.017 | 3.862 | 13 | -0.171 | | -1 |
| **B44** | 1.009 | 2.783 | 3.793 | 14 | -1.774 | | -7 |
| **B14** | 1.668 | 2.119 | 3.787 | 15 | -0.451 | | -4 |
| **B23** | 1.903 | 1.861 | 3.764 | 16 | 0.042 | 10 | |
| **B11** | 2.261 | 1.243 | 3.504 | 17 | 1.018 | 3 | |
| **B12** | 1.581 | 1.84 | 3.421 | 18 | -0.259 | | -3 |

## 3.3 TAISM method

### *3.3.1 Build an adjacency matrix A*

Introducing the intercept *A*, the intercept value in this paper is obtained by statistics with the matrix *T*, and its calculation formula is:

$$\lambda = \bar{x} + \sigma \tag{7}$$

Where *A* is the mean of the matrix values in the *T* matrix, *B* is the sample standard deviation,

$$\sigma = \sqrt{\frac{\sum_{i=1}^{n^2}(x_i - \bar{x})^2}{n^2 - 1}} \tag{8}$$

$$O_{ij} = \begin{cases} 1, & t_{ij} \geq \lambda = 0.16501710625713 \\ 0, & t_{ij} < \lambda = 0.16501710625713 \end{cases} (i, j = 1,2,3, \ldots 18)$$

**Table 4. Adjacency matrix *A***

A=

| $M_{18\times18}$ | B11 | B12 | B13 | B14 | B21 | B22 | B23 | B24 | B25 | B31 | B32 | B33 | B34 | B35 | B41 | B42 | B43 | B44 |
|---|---|---|---|---|---|---|---|---|---|---|---|---|---|---|---|---|---|---|
| **B11** | 0 | 0 | 0 | 0 | 0 | 1 | 0 | 0 | 0 | 0 | 0 | 0 | 0 | 0 | 0 | 1 | 1 | 0 |
| **B12** | 0 | 0 | 0 | 0 | 0 | 0 | 0 | 0 | 0 | 0 | 0 | 0 | 0 | 0 | 0 | 0 | 0 | 0 |
| **B13** | 0 | 0 | 0 | 0 | 0 | 0 | 0 | 0 | 0 | 0 | 0 | 0 | 0 | 0 | 0 | 0 | 0 | 0 |
| **B14** | 0 | 0 | 0 | 0 | 0 | 0 | 0 | 0 | 0 | 0 | 0 | 0 | 0 | 0 | 0 | 0 | 0 | 0 |
| **B21** | 0 | 0 | 0 | 0 | 0 | 1 | 0 | 1 | 0 | 0 | 0 | 0 | 0 | 0 | 1 | 1 | 1 | 1 |
| **B22** | 0 | 0 | 1 | 1 | 1 | 0 | 0 | 1 | 0 | 0 | 0 | 0 | 1 | 0 | 1 | 1 | 1 | 1 |
| **B23** | 0 | 0 | 0 | 0 | 0 | 0 | 0 | 0 | 0 | 0 | 0 | 0 | 0 | 0 | 0 | 0 | 0 | 0 |
| **B24** | 0 | 0 | 0 | 0 | 0 | 1 | 0 | 0 | 0 | 0 | 0 | 0 | 0 | 0 | 0 | 1 | 0 | 1 |
| **B25** | 0 | 0 | 0 | 0 | 0 | 1 | 0 | 0 | 0 | 0 | 0 | 0 | 0 | 0 | 1 | 1 | 1 | 1 |
| **B31** | 0 | 0 | 0 | 1 | 1 | 1 | 0 | 1 | 0 | 0 | 0 | 0 | 1 | 0 | 1 | 1 | 1 | 1 |
| **B32** | 0 | 0 | 0 | 0 | 1 | 1 | 0 | 1 | 0 | 0 | 0 | 0 | 1 | 0 | 1 | 1 | 1 | 1 |
| **B33** | 0 | 0 | 0 | 0 | 0 | 0 | 0 | 0 | 0 | 0 | 0 | 0 | 0 | 0 | 0 | 1 | 0 | 1 |
| **B34** | 0 | 0 | 0 | 0 | 0 | 1 | 0 | 0 | 0 | 0 | 0 | 0 | 0 | 0 | 0 | 1 | 1 | 1 |
| **B35** | 0 | 0 | 0 | 0 | 0 | 1 | 0 | 0 | 0 | 0 | 0 | 0 | 1 | 0 | 0 | 1 | 1 | 1 |
| **B41** | 0 | 0 | 0 | 0 | 0 | 0 | 0 | 0 | 0 | 0 | 0 | 0 | 0 | 0 | 0 | 1 | 0 | 0 |
| **B42** | 0 | 0 | 0 | 0 | 0 | 0 | 0 | 0 | 0 | 0 | 0 | 0 | 0 | 0 | 0 | 0 | 0 | 0 |
| **B43** | 0 | 0 | 0 | 0 | 0 | 0 | 0 | 0 | 0 | 0 | 0 | 0 | 0 | 0 | 0 | 0 | 0 | 0 |
| **B44** | 0 | 0 | 0 | 0 | 0 | 0 | 0 | 0 | 0 | 0 | 0 | 0 | 0 | 0 | 0 | 0 | 0 | 0 |

### *3.3.2 Build the reachable matrix R*

For any adjacency matrix $A$, the reachable matrix $R$ is calculated as follows:

$$B = A + I \tag{9}$$

Where $B$ is the multiplication matrix, $I$ is the identity matrix, that is, a Boolean square matrix with only the diagonal value of 1. Then multiply $B$ consecutively:

$$B^{k-1} \neq B^{k} = B^{k+1} = R \tag{10}$$

From this, the reachable matrix $R$ is obtained, and the result is as follows:

**Table 5. Reachable matrix *R***

| $M_{18\times18}$ | B11 | B12 | B13 | B14 | B21 | B22 | B23 | B24 | B25 | B31 | B32 | B33 | B34 | B35 | B41 | B42 | B43 | B44 |
|---|---|---|---|---|---|---|---|---|---|---|---|---|---|---|---|---|---|---|

R=

| | | | | | | | | | | | | | | | | | | | | |
|---|---|---|---|---|---|---|---|---|---|---|---|---|---|---|---|---|---|---|---|---|
| **B11** | 1 | | 1 | 1 | 1 | 1 | | 1 | | | | | | 1 | | 1 | 1 | 1 | 1 |
| **B12** | | 1 | | | | | | | | | | | | | | | | | |
| **B13** | | | 1 | | | | | | | | | | | | | | | | |
| **B14** | | | | 1 | | | | | | | | | | | | | | | |
| **B21** | | | 1 | 1 | 1 | 1 | | 1 | | | | | | 1 | | 1 | 1 | 1 | 1 |
| **B22** | | | 1 | 1 | 1 | 1 | | 1 | | | | | | 1 | | 1 | 1 | 1 | 1 |
| **B23** | | | | | | | 1 | | | | | | | | | | | | |
| **B24** | | | 1 | 1 | 1 | 1 | | 1 | | | | | | 1 | | 1 | 1 | 1 | 1 |
| **B25** | | | 1 | 1 | 1 | 1 | | 1 | 1 | | | | | 1 | | 1 | 1 | 1 | 1 |
| **B31** | | | 1 | 1 | 1 | 1 | | 1 | | 1 | | | | 1 | | 1 | 1 | 1 | 1 |
| **B32** | | | 1 | 1 | 1 | 1 | | 1 | | | 1 | | | 1 | | 1 | 1 | 1 | 1 |
| **B33** | | | | | | | | | | | | 1 | | | | | 1 | | 1 |
| **B34** | | | 1 | 1 | 1 | 1 | | 1 | | | | | | 1 | | 1 | 1 | 1 | 1 |
| **B35** | | | 1 | 1 | 1 | 1 | | 1 | | | | | | 1 | 1 | 1 | 1 | 1 | 1 |
| **B41** | | | | | | | | | | | | | | | | 1 | 1 | | |
| **B42** | | | | | | | | | | | | | | | | | 1 | | |
| **B43** | | | | | | | | | | | | | | | | | | 1 | |
| **B44** | | | | | | | | | | | | | | | | | | | 1 |

### *3.3.3 Build a general skeleton matrix S*

The reduction point is carried out by the reachable matrix $R$, that is, the loop in the reachable matrix is regarded as a point, which is called the reduction point. After reduction the point, the reduction points reachable matrix $R'$ is obtained, and then the edge reduction calculation is carried out. The essence of the edge reduction operation is to delete the repeated paths, the method is as follows:

$$S' = R' - (R' - I)^2 - I \qquad (11)$$

The skeleton matrix $S'$ is obtained by reducing the edge of $R'$, and the general skeleton matrix $S$ is obtained by substituting the loop elements.

### *3.3.4 Build the matrix with influence values WS*

The value of 1 in the general skeleton matrix $S$ is replaced with the comprehensive influence value, that is, the corresponding value in $T$ is replaced to obtain the influence value skeleton matrix $TS$. Mark the directed edge inside the loop chain with 1 to obtain the matrix with influence value $WS$.

*WS* is the matrix with influence values shown in Table 6.

**Table 6. The matrix with influence values WS**

| $M_{18\times18}$ | B11 | B12 | B13 | B14 | B21 | B22 | B2 | B24 | B25 | B31 | B32 | B33 | B34 | B35 | B41 | B42 | B43 | B44 |
|---|---|---|---|---|---|---|---|---|---|---|---|---|---|---|---|---|---|---|
| **B11** | 0 | 0 | 0 | 0 | 0 | 0.193 | 0 | 0 | 0 | 0 | 0 | 0 | 0 | 0 | 0 | 0 | 0 | 0 |
| **B12** | 0 | 0 | 0 | 0 | 0 | 0 | 0 | 0 | 0 | 0 | 0 | 0 | 0 | 0 | 0 | 0 | 0 | 0 |
| **B13** | 0 | 0 | 0 | 0 | 0 | 0 | 0 | 0 | 0 | 0 | 0 | 0 | 0 | 0 | 0 | 0 | 0 | 0 |
| **B14** | 0 | 0 | 0 | 0 | 0 | 0 | 0 | 0 | 0 | 0 | 0 | 0 | 0 | 0 | 0 | 0 | 0 | 0 |
| **B21** | 0 | 0 | 0 | 0 | 0 | 1 | 0 | 1 | 0 | 0 | 0 | 0 | 1 | 0 | 0.192 | 0 | 0.224 | 0.20 |
| **B22** | 0 | 0 | 0.172 | 0.193 | 1 | 0 | 0 | 1 | 0 | 0 | 0 | 0 | 1 | 0 | 0 | 0 | 0 | 0 |
| **B23** | 0 | 0 | 0 | 0 | 0 | 0 | 0 | 0 | 0 | 0 | 0 | 0 | 0 | 0 | 0 | 0 | 0 | 0 |
| **B24** | 0 | 0 | 0 | 0 | 1 | 1 | 0 | 0 | 0 | 0 | 0 | 0 | 1 | 0 | 0 | 0 | 0 | 0 |
| **B25** | 0 | 0 | 0 | 0 | 0 | 0.172 | 0 | 0 | 0 | 0 | 0 | 0 | 0 | 0 | 0 | 0 | 0 | 0 |
| **B31** | 0 | 0 | 0 | 0 | 0.189 | 0 | 0 | 0 | 0 | 0 | 0 | 0 | 0 | 0 | 0 | 0 | 0 | 0 |
| **B32** | 0 | 0 | 0 | 0 | 0.169 | 0 | 0 | 0 | 0 | 0 | 0 | 0 | 0 | 0 | 0 | 0 | 0 | 0 |
| **B33** | 0 | 0 | 0 | 0 | 0 | 0 | 0 | 0 | 0 | 0 | 0 | 0 | 0 | 0 | 0 | 0.176 | 0 | 0.17 |
| **B34** | 0 | 0 | 0 | 0 | 1 | 1 | 0 | 1 | 0 | 0 | 0 | 0 | 0 | 0 | 0 | 0 | 0 | 0 |
| **B35** | 0 | 0 | 0 | 0 | 0 | 0.201 | 0 | 0 | 0 | 0 | 0 | 0 | 0 | 0 | 0 | 0 | 0 | 0 |
| **B41** | 0 | 0 | 0 | 0 | 0 | 0 | 0 | 0 | 0 | 0 | 0 | 0 | 0 | 0 | 0 | 0.165 | 0 | 0 |
| **B42** | 0 | 0 | 0 | 0 | 0 | 0 | 0 | 0 | 0 | 0 | 0 | 0 | 0 | 0 | 0 | 0 | 0 | 0 |
| **B43** | 0 | 0 | 0 | 0 | 0 | 0 | 0 | 0 | 0 | 0 | 0 | 0 | 0 | 0 | 0 | 0 | 0 | 0 |
| **B44** | 0 | 0 | 0 | 0 | 0 | 0 | 0 | 0 | 0 | 0 | 0 | 0 | 0 | 0 | 0 | 0 | 0 | 0 |

T=

### *3.3.5 Extraction of adversarial hierarchy*

For the reachable matrix, there is reachable set *R*, prior set *Q*, and common set *T*, where $T = R \cap Q$. Taking the adjacency matrix *A* as an example, the reachable set of $e_i$ is denoted as $R(e_i)$, that is, all elements whose row value corresponds to 1. The prior set of $e_i$ is denoted as $Q(e_i)$, that is, all the elements whose column value corresponds to 1. The common set of $e_i$ is denoted as $T(e_i)$, that is, $R(e_i) \cap Q(e_i)$.

For the UP-type topology diagram, the results are prioritized for hierarchical division, and the extraction rules are as follows: $\mathrm{T(e_i) = R(e_i)}$. As long as the reachable set is the same as the common set, the relevant elements are extracted. The extracted features are placed above each time, and the extracted features are placed in order from top to bottom.

For the DOWN-type topology diagram, the reasons are prioritized for hierarchical division, and the extraction rules are as follows: $T(e_i) = Q(e_i)$.The extracted features are placed below each time, and the extracted features are placed in order from bottom to top.

Extracted according to the above method, the results are shown in Table 7:

**Table 7. Adversarial level extraction results**

| Level | Result priority——UP-type | Reason priority——DOWN-type |
|---|---|---|
| **Level 1** | B12, B13, B14, B23, B42, B43, B44 | B42 |
| **Level 2** | B33, B41 | B13, B14, B41, B43, B44 |
| **Level 3** | B21, B22, B24, B34 | B21, B22, B24, B34 |
| **Level 4** | B11, B25, B31, B32, B35 | B11, B12, B23, B25, B31, B32, B33, B35 |

### 3.4 Draw an adversarial topology hierarchy structure model diagram

According to the relationship between elements and the results of the confrontation level extraction, a directed topological hierarchy graph can be drawn. There is reachable relationship among factors in the system, which is represented by a directed line segment and a two-way arrow to form a loop, that is, they are reachable relationship with each other, At the same time, the lower layer indicates that the influencing factors are rooted, and the higher layer indicates that the influencing factors are direct. The UP-type and DOWN-type topological hierarchical structure model diagrams are shown in Figure 3 and Figure 4.

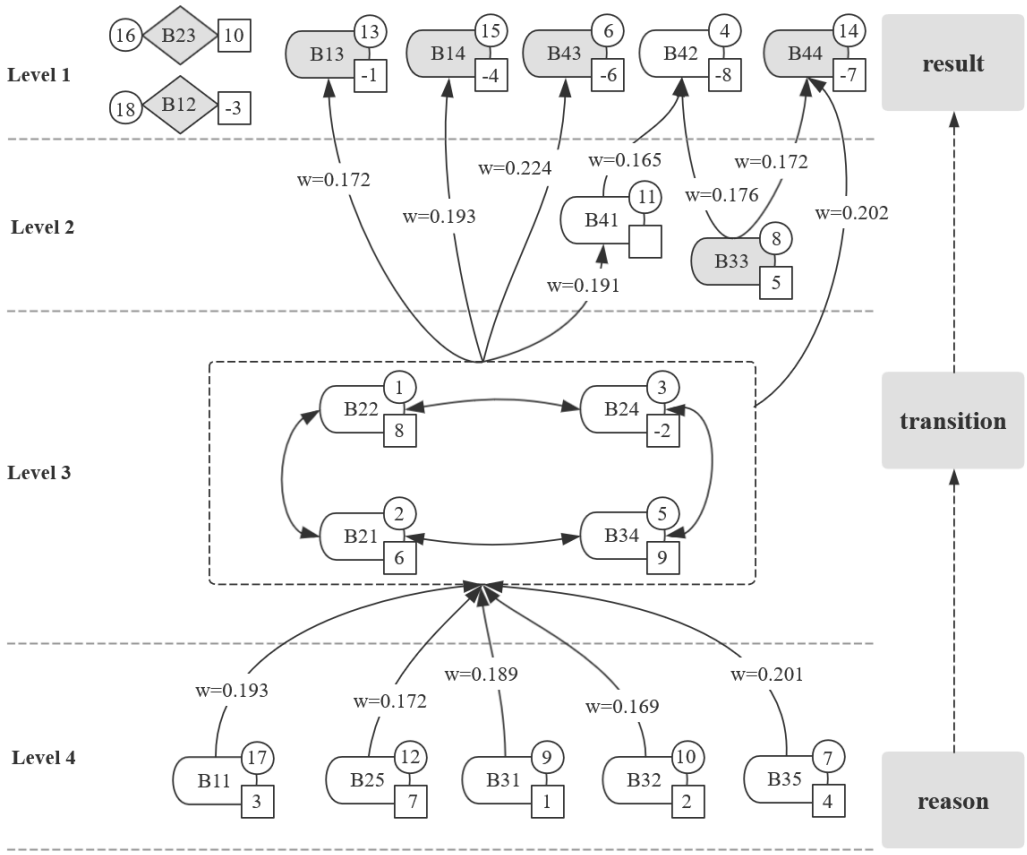


**Fig.3. UP-type topological hierarchical structure model diagram**

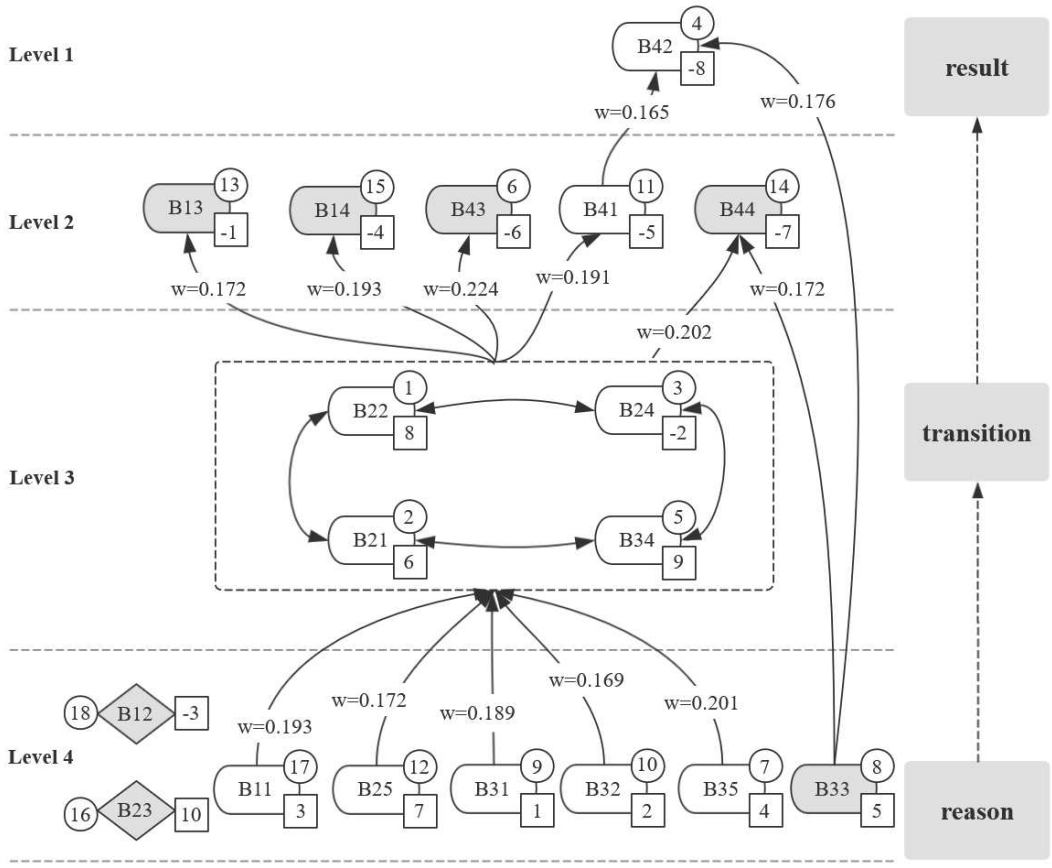


**Fig.4. DOWN-type topological hierarchical structure model diagram**

# 4. Application Analysis Based on DEMATEL-TAISM Model

## 4.1 Centrality degree and reason degree analysis

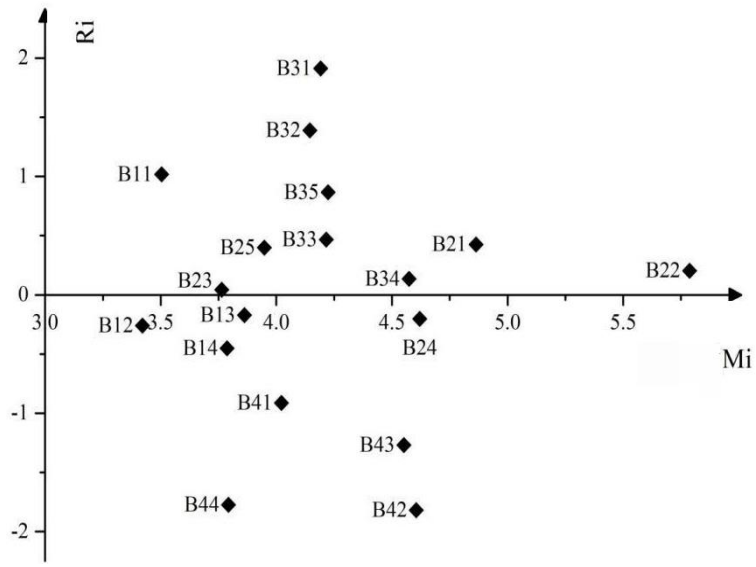


**Fig.5. Distribution of reasons and results of influencing factors**

### *4.1.1 Centrality degree*

The function of centrality degree is to measure the influence of factors on the whole system. The larger the value of the factor, the more important the factor is and the stronger the impact on the system. According to Figure 5, we can see that the top five centrality values of the influencing factors of artificial intelligence multi-cloud scheduling applied talents training are: applied talents training input cost B22, talent management and development system B21, degree of participation in industry-university-research education B24, career goals height B42, industry R&D and innovation support B34. Therefore, these factors should be focused and analyzed when regulating the system.

### *4.1.2 Reason degree*

The function of reason degree is to measure the influence of factors on other factors. When $R_i > 0$, this factor is the cause factor. The larger the value of $R_i$ is, the greater its influence on other factors

is. When $R_i < 0$, this factor is the result factor, and the smaller the value of $R_i$, the greater the degree of its influence by other factors. In this system, the top five positive values of reason degree are: corporate social responsibility B23, enterprise R&D and innovation support B34, applied talents training investment cost B22, training promotion and incentive mechanism B25 and talent management and development system B21. Factors are mainly distributed at the enterprise level and the social level, indicating that they are more likely to have an impact on the training of artificial intelligence multi-cloud scheduling applied talents. Therefore, we should pay attention to the regulation of these factors.

In the system, the top five negative values of causation degree from small to large are:career goal height B42, awareness of industry and corporate standards B44, innovation self-efficacy B43, individual characteristics B41, and professional re-education intensity B14. We found that the four factors at the individual level are all outcome factors, that is, they are strongly influenced by other factors, which is also consistent with our expected cognition. When regulating these factors, we should pay attention to other related factors.

### 4.2 Analysis of Extensible Active Systems

In the topology hierarchy model diagram, if an factor is at different levels in the UP-type topology diagram and the DOWN-type topology diagram, it is called an active factor. A system with active factors is called an extension variable system, also called an active system; A system without active factors is called a rigid system, also known as a topologically rigid system. In the system shown in the above figure, the grey marked factors B12, B23, B13, B14, B43, B44 and B33 are transition between different levels, so they are activity factors. The research on influencing factors of artificial

intelligence multi-cloud scheduling applied talents training This system is an extension variable system.

### 4.3 Isolated factor analysis

Factors B12 and B23 represented by diamonds in the topology hierarchy model diagram are isolated factors. It can be seen from the topology diagram that B12 and B23 have no directed line segment representation with other factors in the system, that is, there is no influence or affected relationship between these two factors and other factors in the system, that is, there is no reachable relationship. From the comprehensive influence matrix T, it can be seen that the degree of influence and the degree of being influenced of experimental equipment and technical capability B12 and corporate social responsibility B23 are also very low, indicating that the interaction between these two factors on other factors is also weak. Therefore, in the subsequent analysis, we choose to remove the isolated factors B12 and B23 for more systematic research.

### 4.4 Loop Analysis

Against the topological hierarchical structure model diagram, if a closed-loop link of bidirectional line segments is formed, we call this link a loop, and each factor in the loop has a causal relationship with each other. From Figure 3 and Figure 4, we can see that there is a loop composed of four factors in the influencing factor system of artificial intelligence multi-cloud scheduling applied talents training, namely talent management and development system B21, applied talents training investment cost B22, degree of participation in industry-university-research education B24, and strength of Industry R&D and innovation support B34. These four factors have mutual causality and

strong connection within the loop. Therefore, the loop can be regarded as a subsystem of the system.

### 4.5 Hierarchy and causal analysis

It can be seen from the UP-type and DOWN-type topological hierarchical structure model diagrams that the influencing factor system of artificial intelligence multi-cloud scheduling applied talents training is a hierarchical structure model with four levels from the bottom to the top. The system can be divided into three levels: substantial level, extended level and superficial level.

The factor of substantial cause level, that is, the factor located at the lowest level in the topological hierarchy model diagram, this level factor will only send upward directed line segments to other level factors, with the strongest influence attribute, and can directly or indirectly affect the factors of other strata more or less, but will not be affected by other level factors, that is, the root factor of the system. The factors of the substantial cause level include: professional degree of teacher structure B11, training promotion and incentive mechanism B25, Supportive Policy and Strategic Impact B31, special fund reward and subsidy standard B32 and the proportion of industrial investment in GDP B35. According to the topological map, it is not difficult to see that if we want to develop or improve the training of Applied Talents in artificial intelligence industry, the social factors at the root play a leading role, and the supporting policies, capital investment and subsidies of the industry have a significant impact on other factors in the system; Secondly, the professional degree of teachers' structure at the college level directly affects the quality of talent training, so we should pay attention to the professional degree of teachers in artificial intelligence industry; The promotion and incentive mechanism at the enterprise level plays a favorable role in promoting the quality of talents. A complete promotion and incentive system can bring more effective incentive

effect.

The factors of the superficial level can also be called the result factors, that is, the factors located at the top level in the topological hierarchy model diagram. This level factor will only receive directed segments from other level factors, but will not send directed segments to other level factors, which is the most affected. The superficial factors are: practical training base construction and education integration degree B13, professional re-education intensity B14, career goals height B42, innovative self-efficacy B43, and the awareness of industry and corporate standards B44. This paper analyzes the factors of superficial level, which only involves the factors of individual level and college level, indicating that it has a more direct impact on the results of talent training. At the individual level, the talents' career goal height, self-efficacy and cognition of the industry are more affected by the factors at the enterprise level and social level. Therefore, in order to improve the impact of this level factor on the system, the breakthrough lies in the regulation of the corresponding influencing factors at the enterprise level and social level. At the college level, the integration of training base and education and the intensity of professional reeducation can directly affect talents' professional quality and practical ability, but these two factors are inseparable from enterprise related factors.

The factor of extended level, that is, the factor located in the middle part of the topological hierarchy model diagram, this hierarchy factor will send upward directed segments to the upper-level factors to affect the upper-level factors; At the same time, it will also receive the directed line segments from the lower-level factors, so the factors have strong extensional influence and the degree of being influenced. The factors that extend level include: talent management and development system B21, applied talents training investment cost B22, degree of participation in

industry-university-research education B24, Industry R&D and innovation support B34, individual characteristics B41, artificial intelligence major and school evaluation B33. By analyzing the factors at this level, the factors at the enterprise level have a stronger centrality degree. Therefore, the enterprise's talent management and development system, the investment cost of relevant talents and the degree of participation in training have a strong control force on the development or promotion of applied talents in the artificial intelligence industry. These three factors are also mutually causal, in consequence, when taking measures, we can focus on one of them; Then the evaluation of artificial intelligence majors and related schools at the social level and the support for enterprise R&D and innovation have a significant positive incentive effect on talents; The individual characteristics at the individual level generally refer to the personality and knowledge of talents, which has a key impact on talent training.

## 5. Summary and suggestions

Based on the research background of multi-cloud scheduling supported by artificial intelligence, this paper constructs the influencing factor model of multi-cloud scheduling applied talent training of artificial intelligence. Based on the DEMATEL method and the improved AISM method, it further measures the influence path and hierarchical distribution in the system of the training quality of multi-cloud scheduling applied talents driven by various factors; Thus, the driving structure and action mechanism of the internal influencing factors of the system are revealed, and the current situation is analyzed. Finally, according to the results, targeted development suggestions are put forward.

### 5.1 Increase industrial investment and subsidies to boost the development and construction of

**the artificial intelligence industry**

The supportive policies, capital investment and subsidies of the artificial intelligence industry are the key factors affecting the development of the artificial intelligence industry, and are of decisive significance to the future development direction of the industry. Supportive policies for industrial development are the most favorable measures to promote enterprises, colleges and individuals to pay more attention to the artificial intelligence industry; The increase in industrial capital investment can drive the layout of enterprises in the artificial intelligence industry and expand the scale of construction; Targeted and refined subsidy policies can encourage enterprises to increase investment in related projects and technology research and development, and effectively reduce the pressure on enterprises in terms of industrial development funds. The continuous exploration and development of enterprises in the artificial intelligence industry will inevitably increase the demand for high-quality applied talents in the artificial intelligence industry, thereby continuously promoting the optimization of the applied talents training system.

### 5.2 Enabling enterprises expand the layout of talents related to IoT multi-cloud scheduling to meet the needs of enterprises for refined talents

Corporate social responsibility is the most original factor in the system, while the enterprise's investment cost in the training of multi-cloud scheduling applied talents and the talent management and development system are the two most central factors in the system. These three factors are all subordinate to the enterprise level, From this point of view, the expansion of the layout and investment of enabling enterprises in the IoT multi-cloud scheduling talents is the basis for the cultivation of multi-cloud scheduling applied talents. Enterprises with a high sense of social

responsibility have a high vision of supporting the development of artificial intelligence industry, and have a subtle influence on the cultivation of professional quality of cloud scheduling related talents in the training process; Enterprises that invest a high cost in talents related to multi-cloud scheduling and have a relatively complete talent management and development system not only have a stronger attraction for talents, but also play a crucial role in improving the systematization of applied talent training related to multi-cloud scheduling.

### 5.3 Strengthen the construction of the professionalism of the faculty structure, and establish a high-quality and high-standard training team

The professional degree of the faculty structure belongs to the class of substantive causes, which is the most direct factor affecting the training results of artificial intelligence multi-cloud scheduling applied talents. That is, teachers should have diversified theoretical knowledge and practical literacy in the field of artificial intelligence and multi-cloud computing resource scheduling. The professional level of teachers' teaching contents and methods directly affects the quality and level of applied talent education and training. Therefore, it is necessary to strengthen the knowledge and skills of teachers in related fields based on artificial intelligence, big data, cloud computing platforms and technologies. The training syllabus and goals for multi-cloud scheduling applied talents should be more targeted and systematic, so that the teaching content can keep pace with the times and adapt to the development of the industry; We can also improve and develop curriculum resources through internal and external cooperation and drawing lessons from foreign curriculum systems. At the same time, the professional faculty structure of the university also creates favorable conditions for cooperation between the industry, the university and the research institute, and the

high quality and high standard training team also boosts the training process of multi-cloud scheduling applied talents.

### 5.4 Strengthen the development mind of multi-cloud scheduling related talents and improve the subjective initiative of talent training

Highly industry talent career goals are one of the factors of system centrality degree is higher, which has a strong influence on the system. The characteristics of talents themselves determine their subjective initiative and self-efficacy in the training process to a certain extent. Talents with higher career development goals will show higher pursuit and development vision in the training process. However, people can not establish their career development goals and development directions from the beginning. Therefore, in talent training, we should strengthen the recognition of talents for the artificial intelligence industry, the IoT and multi-cloud computing, strengthen the development mind of artificial intelligence multi-cloud scheduling applied talents, strengthen the guidance of their career development goals and plans, and guide them to form the career values of highly skilled talents,Enhance the initiative and enthusiasm of talents in the training process, so as to promote the training of applied talents for multi-cloud scheduling.

## Ethical Approval and Consent to participate

Not applicable.

## Consent for publication

Not applicable.

**Availability of data and materials**

The data used to support the findings of this study are available from the corresponding author upon request.

**Competing interests**

The authors declare that they have no competing interests.

**Funding**

This work was supported by the special key project "Research on vocational skill level evaluation system of artificial intelligence integrated with industry and education" of modern educational technology research smart campus in Jiangsu Province (2020-R-84366).

**Authors' contributions**

Conceptualization was done by Yi-jie Bian; investigation was conducted by Jing-qi Li and Lu Xie; methodology was done by Yi-jie Bian and Lu Xie; writing of original draft was performed by Lu Xie; review and editing was carried out by Yi-jie Bian and Jing-qi Li.

**Acknowledgements**

This work was supported by the special key project "Research on vocational skill level evaluation system of artificial intelligence integrated with industry and education" of modern educational technology research smart campus in Jiangsu Province (2020-R-84366).

**Authors' information**

Yi-jie Bian was born in 1964. He received the Ph.D. degree in Technical Economics and Management from Hohai University, Nanjing. He is currently a professor of Department of Management Science and Information Management, Business School, Hohai University. His research interests include information management and educational informatization.

Lu Xie received the bachelor's degree in E-commerce, from the Henan University, in 2015. She is currently pursuing the master's degree in Management Science and Engineering, Hohai University. Her research interests are on information management and educational informatization.

Jing-qi Li is a senior engineer of Network Security and Information Management Office of Hohai University. He is currently a Ph. D Candidate in Management Science and Engineering, Hohai University. His research interests focus on big date analysis and artificial intelligence.

**References**


1. Zhou XK, XU XS, Liang W, Zeng Z and Yan Z (2021) Deep-Learning-Enhanced multitarget detection for end-edge-cloud surveillance in smart IoT. IEEE Internet of Things Journal 8(16):12588-12596.
2. Gu R, Chen YQ, Liu S, Dai HP, Chen GH, Zhang K, Che Y, Huang YH (2021) Liquid: Intelligent resource estimation and network-efficient scheduling for deep learning jobs on distributed GPU clusters. IEEE Transactions on Parallel and Distributed Systems 33(11):2808-2802.
3. Huang JW, Tong ZY, Feng ZH (2022) Geographical POI Recommendation for Internet of Things: A Federated Learning Approach Using Matrix Factorization. International Journal of Communication Systems DOI:10.1002/dac.5161.
4. Wang TT, Ren YQ (2018) Talent strategy in the age of artificial intelligence: interpretation of the "innovative action plan for artificial intelligence in colleges and universities"(3). Journal of Distance Education 36(05):52-59.
5. Grover S,Pea R (2013) Computational thinking in K-12 a review of the state of the field. Educational Researcher 42(1):38-43

6. Chen J, Lv WJ (2017) A major shift of artificial intelligence and talents cultivation in emerging engineering education(3E). Research in Higher Education of Engineering. (06):18-23.
7. Zhou X, Li Y,Liang W (2020) CNN-RNN based intelligent recommendation for online medical pre-diagnosis support. IEEE/ACM Transactions on Computational Biology and Bioinformatics 18(3):912-921.
8. Dai HP, Wang XY, Lin XZ, Gu R, Liu YH, Dou WC, Chen GH (2020). Placing Wireless Chargers with Limited Mobility. IEEE Conference on Computer Communications 2056-2065. DOI: 8.10.1109/INFOCOM41043.2020.9155356.
9. Wang J,Yang W (2017) Historical analysis and frontier progress of the impact of artificial intelligence and other technologies on Employment. Review of Economic Research. 27:11-25
10. Jun W (2019) Human resource management talent cultivation under the background of artificial intelligence. Proceedings of 2019 9th international conference on Management, Education and Information(MEICI 2019). pp 308-312.
11. Liu CY, Zeng MS (2019) Practice and exploration of managerial accounting talent cultivation under the background of big data and artificial intelligence. Frontiers in Educational Research 2(6):173-187.
12. Feng J (2020) The reform of cultivation mode of chinese university english translation talents in the age of artificial intelligence. Higher Education of Social Science 18(1):45-49.
13. Oberc H, Fahle S, Prinz C, Kuhlenktter B (2020) A practical training approach in learning factories to make artificial intelligence tangible. Procedia CIRP 93:467-472.
14. Chen Y, Liu ZY, Zhang YC, Wu Y, Chen X, Zhao L (2021) Deep Reinforcement Learning-Based Dynamic Resource Management for Mobile Edge Computing in Industrial Internet of Things. IEEE Transactions on Industrial Informatics 17(7):4925-4934.
15. Fang B, Marxism S O,University A N (2019) The origin, impact and countermeasures of “artificial intelligence fever” in chinese universities. Modern Educational Technology 29(04):33-39.
16. Zhao ZX, Duan XX (2019) The reform of talent cultivation model in higher education in the age of artificial intelligence: basis, dilemma and path.Journal of Southwest University for Nationalitie 40(02): 213-219.
17. Geng LL, Fu JJ. (2020) The training model of artificial intelligence undergraduate talents in world-class universities and its enlightenment——based on comparative analyses of massachusetts institute of technology, stanford university and carnegie mellon university. Modern Educational Technology 30(02):14-20.
18. Zhou XK, Liang W, Wang IK and Yang LT (2020) Deep correlation mining based on hierarchical hybrid networks for heterogeneous big data recommendations. IEEE Transactions

on Computational Social Systems 8(01):171-178

19. Qi LY, Hu CH, Zhang XY, Khosravi MR, Sharma S and Wang K (2020) Privacy-Aware data fusion and prediction with spatial-temporal context for smart city industrial environment. IEEE Transactions on Industrial Informatics 17(6):4159-4167.
20. Huang JW, Zhang CX, Zhang JB (2020) A Multi-queue Approach of Energy Efficient Task Scheduling for Sensor Hubs. Chinese Journal of Electronics 29(2):242-247.
21. Chen Y, Gu W, Li KX (2020) Dynamic Task Offloading for Internet of Things in Mobile Edge Computing via Deep Reinforcement Learning. International Journal of Communication Systems. DOI: 10.1002/dac.5154.
22. Gu R, Zhang K, Xu ZH, Che Y, Fan B, Hou HJ, Dai HP, Yi L, Ding Y, Chen GH and Huang YH (2022) Fluid: dataset abstraction and elastic acceleration for cloud-native deep learning training jobs. The 38th IEEE International Conference on Data Engineering. pp 2183-2196.
23. Pan MY, Zhou QY(2009).The construction of applied undergraduate courses from the perspective of college classification. China University Teaching (03):4-7.
24. Zhou XK, Liang W, Li W, Yan K, Shimizu S and Wang IK (2021) Hierarchical adversarial attacks against graph neural network based IoT network intrusion detection system. IEEE Internet of Things Journal. DOI:10.1109/JIOT.2021.3130434.
25. Fu BJ, Shen ZH (2021) From appropriateness to guidance: strategic conception of applied talents training from the perspective of supply-side reform. Journal of National Academy of Education Administration (10):38-46.
26. Analysis of 2020 global artificial intelligence Talent Training Research. Report Robot Industry 05:91-105. DOI:10.19609/j.cnki.cn10-1324/tp.2020.05.017.
27. Dai HP, Xu Y, Chen GH, Dou WC, Tian C, Wu XB and He T (2022) ROSE: Robustly safe charging for wireless power transfer. IEEE Transactions on Mobile Computing (TMC) 21(6):2180-2197
28. Zhou P, Wang WH, Lu CH (2015) Empirical analysis on the influencing factors of talent cultivation in applied undergraduate course colleges. Heilongjiang Researches on Higher Education 10:144-149.
29. Liu ZM, Wu B (2016) On the reasons for enterprises' participation in joint talents cultivation with higher vocational colleges. Research in Higher Education of Engineering. (02):143-147.21.
30. Shao YF, Pang B, Fang JM (2016). Research on inner-enterprise synergy and innovation performance from the perspective of IT capability. Management Review 30(06):70-80.
31. Huang JW, Lv BF, Wu Y, Chen Y, Shen XM (2022) Dynamic Admission Control and Resource Allocation for Mobile Edge Computing Enabled Small Cell Network. IEEE Transactions on

Vehicular Technology 71(2):1964-1973.

32. Chen Y, Zhao F, Lu Y, Chen X (2021) Dynamic Task Offloading for Mobile Edge Computing with Hybrid Energy Supply. Tsinghua Science and Technology. DOI: 10.26599/TST.2021.9010050.
33. Han YP (2016) The risk management mechanism of talents training in innovative enterprises. Science and Technology Management Research 36(17):153-157.
34. Huang W (2003) Inspiration of Hacker & Counter-hacker thought research methodology: an new exploration of ISM, Guangzhou: South China Normal University.
35. Zhou DQ, Zhang L (2008) Establishing hierarchy structure in complex systems based on the integration of DEMATEL and ISM. Journal of Management Sciences in China 11(02):20-26.
36. Xie XL (2019) Research on competitiveness of coastal smart port based on adversarial interpretative structural modeling method. Tianjin: Tianjin University.