Quorum sensing activities and genomic insights of plant growth-promoting rhizobacteria isolated from Assam tea

Ankita Chopra
Assam University
Dattatray Mongad
National Centre for Cell Science
Surekha Satpute
Savitribai Phule Pune University
Pranab Behari Mazumder
Assam University
Praveen Rahi (prahi@pasteur.fr)
National Centre for Cell Science

Research Article

Keywords: acyl-homoserine lactone, PGPR, genomics, Pseudomonas aeruginosa, Burkholderia cepacia

Posted Date: November 14th, 2022

DOI: https://doi.org/10.21203/rs.3.rs-2256499/v1

Additional Declarations: No competing interests reported.

Version of Record: A version of this preprint was published at World Journal of Microbiology and Biotechnology on April 17th, 2023. See the published version at https://doi.org/10.1007/s11274-023-03608-1.

Abstract

Secretion of quorum sensing (QS) molecules is important for the effective colonization of host plants by plant growth-promoting rhizobacteria. The current study aims at the isolation and characterization of tea rhizosphere bacteria, which produce the QS molecules, acyl homoserine lactone (AHLs), along with multiple plant growth-promoting (PGP) activities. Thirty-one strains were isolated from the tea rhizosphere, and screening for PGP activities resulted in the selection of strains RTE1 and RTE4 with multiple PGP traits, inhibiting the growth of tea fungal pathogens. Both strains also showed production of AHL molecules while screened using two biosensor strains, *Chromobacterium violaceum* CV026 and *Escherichia coli* MT 102(jb132). The strains identified as *Burkholderia cepacia* RTE1 and *Pseudomonas aeruginosa* RTE4 based on genome-based analysis like phylogeny, dDDH, and fastANI calculation. Detailed characterization of AHLs produced by the strains using reverse-phase TLC, fluorometry, and LC-MS indicated that the strain RTE1 produced a short chain, C8, and a long chain C12 AHL, while RTE4 produced short-chain AHLS C4 and C6. Confocal microscopy revealed the formation of thick biofilm by RTE1 and RTE4 (18 µm and 23 µm, respectively).

Additionally, we found several genes involved in QS, and PGP, inducing systemic resistance (ISR) activities such as *lasI/R*, *qscR*, *pqq*, *pvd*, *aldH*, *acdS*, *phz*, *Sod*, *rml*, and *Pch*, and biosynthetic gene clusters like *N*-acyl homoserine lactone synthase, terpenes, pyochelin, and pyocyanin. Based on the functional traits like PGP, biofilm formation and production of AHL molecules, and genetic potential of the strains *B. cepacia* RTE1 and *P. aeruginosa* RTE4 appear promising candidates to improve the health and growth of tea plantations.

Introduction

Over the years, many studies have been conducted on rhizobacteria and their role in the growth and development of various plants. The bacteria which qualify in the production of different phytohormones and hydrolytic enzymes, solubilizing soil nutrients, fixing nitrogen, and combating biotic and abiotic stress are termed plant growth promoting rhizobacteria (PGPR). Colonization of rhizosphere/root by the PGPR strain is crucial to deliver the benefits to the host plant successfully. In this regard, PGPR, with the potential to form a biofilm, is favorable as biofilms can protect the plant from environmental stress (Haque et al., 2020). Plant growth promoting (PGP) traits are often controlled by small signaling molecules produced by bacteria in response to their population density (Degrassi et al. 2002; Imran et al. 2014; Jung et al. 2017). This is the phenomenon of quorum sensing (QS), which allows bacteria to regulate their gene expression in a synchronized manner and communicate among themselves and their hosts (both prokaryotic and eukaryotic).

The QS signaling molecules produced by Gram-negative bacteria are mostly *N*-acyl homoserine lactone (AHL). These signaling molecules can remain localized in roots and penetrate plant tissue and translocate to exert their effect on the aerial organs of the plant (Schikora et al. 2016). AHL molecules consist of a homoserine lactone ring and fatty acyl chain of varying lengths (C4 to C18) with an acyl group either saturated or unsaturated and substituted on the C3-atom by an oxo or OH group. Bacteria possess AHL as autoinducing signals, and their cognate LuxR type receptors constitute a QS system (Fuqua & Greenberg, 2002). This interaction between AHL molecules and the receptor proteins then activates the QS-related genes (Parsek et al. 1999) responsible for biofilm formation (Balasundararajan & Dananjeyan, 2019), biosurfactant production (Martinez et al. 2020), swarming motility, antibiotic production, phytohormone production (Bai et al. 2012), siderophore production (Stintzi et al. 1998) and induce systemic resistance in plants (Schuhegger et al. 2006).

Although PGPR associated with crops such as wheat, maize, rice, etc. are widely studied, it is essential to note that, despite tea being a vital plantation crop, there are very few reports on the tea rhizosphere bacteria (Dutta et al. 2015; Bhattacharyya et al. 2020; Bag et al. 2022). Tea plantation often have acidic soils (Pandey et al. 2013) and prefers humid climatic conditions for their growth. The acidic soils challenge the availability of key nutrients (Ch'ng et al. 2014). On the other hand, the highly humid conditions may attract a lot of fungal pathogens, leading to severe crop loss (Dhar Purkayastha et al. 2018). To meet the nutritional requirements of tea and to prevent fungal diseases, large volumes of chemicals are being used in tea gardens, which are detrimental to the environment and often have residual effects on the final product (Chakraborty et al. 2013). PGPR offers an alternative to these chemical inputs. However, it is a prerequisite to developing a deep understanding of the PGP potential of rhizobacteria and the signal molecules which allows rhizobacteria to successfully colonize the rhizosphere to deliver their beneficial amenities to the host plant (Hartmann, 2020).

Bacillus, Pseudomonas, Klebsiella, Burkholderia, Serratia, Enterobacter, and *Brevibacterium* have been reported from the tea rhizosphere for their PGP activities (Dutta et al. 2015; Bhattacharyya et al. 2017; Khan et al. 2017; Chopra et al. 2020b). Although, the information on the ability to colonize and produce QS signaling molecules by PGPR from tea is lacking. Thus, investigating the production of QS

molecules and the PGP activities for the tea rhizobacteria was worth it. Additionally, the genome sequencing of tea rhizobacteria will shed light on the genetic potential of these strains.

In the current study, bacteria were isolated from the tea rhizosphere samples collected from three tea gardens of Assam and screened for their plant growth-promoting attributes, mainly focusing on producing AHL molecules and their characterization. Genome sequences of two high AHL-producing PGPR (RTE1 and RTE4) were also conducted to decipher their potential in conferring biocontrol potential against pathogens, production of bioactive molecules, and inducing resistance in the plant.

Material And Methods

Sample collection and isolation of rhizobacteria

Soil samples were collected from a depth of 5–20 cm from the tea rhizosphere of three tea estates of Assam, namely the Kalinagar Tea Estate (situated in Karimganj district of Assam, India), and Rosekandy and Iringmara Tea Estates (situated in Cachar district of Assam, India). The samples collected in sterile polythene bags were carried to the laboratory and stored at 4°C till further use. Bacteria were isolated using Nutrient agar (NA) and Luria Bertani (LB) agar (Himedia, India) and incubation at 30°C for 24–48 h. Pure colonies were generated by repeated streaking, and pure cultures were suspended in 20% glycerol and phosphate buffer saline (PBS (1X) solution for cryopreservation at -80°C.

Screening For Plant Growth-promoting Activities

Thirty-one bacterial isolates were screened for PGP activities. For indole acetic acid (IAA) production, bacterial cultures grown in LB broth (amended with L-tryptophan, 100 mg/L) were mixed with a freshly prepared Salkowski reagent. The development of pinkish-red color indicated IAA production (Rahman et al. 2010). For ammonia production, Nessler's reagent was added to cultures grown in peptone water. The development of yellow to brown color was recorded (Dey et al. 2004; Singh et al. 2014). Pikovskaya's agar containing calcium phosphate as the sole phosphate source was used to investigate the phosphate solubilization potential of the isolates and the formation of a clear zone around the colonies, which indicates P solubilizer (Nautiyal, 1999). The proteolytic activity of isolates was confirmed by the formation of clear halos around the bacterial colonies inoculated on skim milk agar plates (Chu, 2007). The isolates were spot inoculated on Congo red agar plates and incubated at 28°C for 72 h. Discoloration of Congo red around the culture confirmed the cellulase activity of isolates (Gupta et al. 2012). Chitinase activity was established by a zone of clearance around the bacterial colony on 1% (w/v) colloidal chitin agar plates incubated at 30°C for up to 8 days (Kuddus and Ahmad, 2013).

Biocontrol Potential Of Rhizobacteria Against Fungal Pathogens

Rhizobacterial isolates were challenged for their biocontrol potential against two tea pathogens; namely, *Corticium invisium* MCC 1841 and *Fusarium solani* MCC 1842, on Potato Dextrose agar (PDA) plates at 28°C. Both pathogens were purchased from the repository-Microbial Culture Collection (MCC) repository, National Centre for Cell Science (NCCS), Pune, Maharashtra. The bacterial cultures were inoculated equidistant from the fungal agar plug. The plates were observed every 24 h to check the bacterial antagonism and compared to the mycelial diameter (mm) of control plates (El-sayed et al. 2014).

Detection Of Ahl In Rhizospheric Isolates

Production of AHL molecules by the rhizobacteria was estimated by using biosensor reporter *Chromobacterium violaceum* CV026 (McClean et al. 1997) and *gfp*-based *E. coli* MT102 (pJBA132) (purchased from NCMR-NCCS, Pune, India) in a cross-feeding plate assay (Viswanath et al. 2015). The plates were incubated at 30°C for 48 h and observed for violet coloration due to the induction of violacein pigment in the reporter strain CV026 (MCC 2216). *C. violaceum* MCC 3299 and *E. coli* DH5α were used as positive and negative controls, respectively. To detect a broad spectrum of AHL molecules, we used *gfp* based biosensor (Andersen et al. 2001). On LB agar plates, the test strain was streaked close to *E. coli* MT102 (pJBA132). After 20 h of incubation at 30°C, the green fluorescence phenotype of the AHL sensor streak was observed by placing the plates on top of the UV documentation system platform.

Biofilm Production By Rhizobacteria

Ten out of thirty-one bacterial isolates showed PGP and biocontrol activities, and thus the biofilm-forming ability of those ten rhizobacterial isolates was evaluated by the tube method (Christensen et al. 1985) and by Congo red agar (CRA) method (Hassan et al. 2011).

Quantitative assessment of biofilm formation was determined by a microtiter dish biofilm-forming assay (O'Toole, 2011). Freshly cultured isolates with an OD at 600 nm of 0.01 were inoculated in LB medium in 96-well microtiter plates and incubated undisturbed for 72 h at 30°C. *Pseudomonas aeruginosa* MCC 2080 and uninoculated LB were used as positive and negative controls, respectively. The category of biofilm producer was defined by calculating the OD produced by bacterial biofilms, as suggested by (Stepanović et al. 2000). Non-adherent: OD ≤ ODc; Weakly adherent: ODc < OD ≤ 2* ODc; Moderately adherent: 2*ODc < OD ≤ 4* ODc; Strongly adherent: 4*ODc < OD.

Quantification Of Bacterial Biofilm Formation By Confocal Laser Scanning Microscopy (Clsm)

Confocal Laser Scanning Microscopy (CLSM) was used to quantify biofilm production following the method suggested by (Ansari and Ahmad, 2018) with slight modifications. Freshly grown bacterial cultures (3 ml culture and 3 ml LB broth) were kept in 24 well tissue culture plates. A 20 mm sterile glass coverslip was placed in each well and incubated at 28 ˚C ± 2 ˚C for 48 h under static conditions. After the incubation period, the glass coverslip was washed three times with 1X PBS (pH 7.2) to remove loosely attached cells from the surface of the coverslip. The biofilm on the glass coverslip was fixed on a glass slide using 4% paraformaldehyde (v/v) in 0.1 M phosphate buffer (pH 7.2) for 4 h. Once dried, the glass slide was observed under a confocal laser scanning microscope, Leica SP5 (Leica Microsystems, Germany), at Bioimaging Facility, National Centre for Cell Sciences, Pune. The cover slip was stained with 0.1% 4',6-diamidino-2-phenylindole (DAPI) (Thermo Fisher Scientific, USA) for 20 min and examined. The depth or thickness of biofilm on the coverslip surface was analyzed by Z-stack analysis using LAS AF software.

16s Rrna Gene-based Strain Identification

Genomic DNA extraction was performed using FavorPrep™ Blood Genomic DNA Extraction Mini kit (FAVORGEN- Europe). The 16S rRNA gene was amplified using universal primers (27F 5´AGAGTTTGATCCTGGCTCAG3´and1492R:5´TACGGCTACCTTGTTACGACTT-3´) according to the methods described by Gulati et al. (2008), and the amplified product was directly sequenced using the ABI PRISM BigDye Terminator v3.1 Cycle Sequencing kit on a 3730xl Genetic Analyzer (Applied BioSystems).

Determination Of Critical Cell Density Of Ahl-producing Strains

Total viable count (TVC) was conducted to determine the critical cell density at which strains show a rapid increase in the production of the AHLs. The strains were grown in LB media having pH 5.5 at 30°C in a shaking incubator at 150 rpm. At an interval of 2 h, starting from 0th h until the decline phase of respective cultures were serially diluted in different dilutions in sterile 1 X PBS. TVC was achieved by spread-plating 100 µL aliquots of different dilutions in duplicates on LA plates. The values thus obtained were plotted against time to obtain the growth curve of the strains.

Extraction And Profiling Of Ahl Molecules

Bacterial cultures were grown to different time points in 100 ml LB starting from low, medium, to high cell densities. The culture was centrifuged twice, and the extraction of AHL was carried out using culture supernatant with a double volume of ethyl acetate (HPLC grade) acidified with 0.05% formic acid (Sigma -Aldrich, United States). The flask was agitated vigorously until the solvent was evenly distributed and kept undisturbed until the phases separated. The upper organic phases were combined, transferred, and dried with anhydrous $MgSO_4$. The organic phase was then concentrated in a rotary evaporator (IKA rotovapors, Germany), re-dissolved in 1 mL ethyl acetate, and dried under a flush of N_2 gas. The samples were then stored in sterile vials at -20°C until use.

The extracted samples, together with the standards, were profiled using C-18 reverse phase thin layer chromatography (RP-TLC) plates (5 cm × 7.5 cm TLC aluminium sheets; RP-18 F254 S) (Merck, Germany), and the chromatogram was developed with a methanol/water

mixture (60:40), as described by Shaw et al. (1997). The developed active AHL spots were visualized by the agar overlay bioassay using the appropriate bioreporter strain (here, AHL extracts of RTE4 were detected using *C. violaceum* CV026.

Subsequently, an overnight culture of biosensor *E. coli* MT102 (jBA 132) was grown in LB. At an OD_{450} of approximately 0.25, 1 ml of biosensor strain was diluted in a 9 ml LB tube. About 2 µl of AHL sample (extracted at different time points) was added to the tube. The tubes were incubated at 30°C in the dark for 6–8 h. After incubation, 10 µl of culture was placed on the glass slide and observed for fluorescence induced in the biosensor cells due to AHL extracts under an Olympus BX-53 microscope with a green filter for gfp, FITC (Olympus, Japan). The green fluorescence was also measured in a fluorometer (DeNovix DS-11, Wilmington, DE, USA) set at a wavelength of 475 nm. The fluorescence data were presented as Relative Fluorescence Unit (RFU). Synthetic AHLs C8 and C10 were used as a positive control, and uninoculated LB was a negative control.

Chemical Characterization Of Ahls Using Liquid Chromatography-mass Spectrometry (Lc-ms)

AHL extracts were resuspended in 100 µL methanol (100%) for identification and quantification in UHPLC (make Thermo Scientific, Model- Ultimate 3000) using Thermo Scientific Acclaim 120 C18 column (4.6 × 250 mm, 5 µm) with injection volume10 µL. AHLs were separated at 28°C using a gradient solvent system with methanol (increasing concentration), glacial acetic acid (constant concentration) 0.2% (v/v) in water, and an initial flow rate of 0.2 mL min^{-1}. The gradient was increased linearly from 40% (v/v) methanol/ 60% (v/v) water–acetic acid to 80% (v/v) methanol/ 20% (v/v) water–acetic acid over 25 min. Mass spectrometry was performed on a High-Resolution mass spectrometer (Bruker, Model- Impact HD, United States) equipped with an electrospray ion source (ESI) in positive ion mode. AHLs were identified by comparison of retention times and *m/z* transitions with those of the standards.

Genome Sequencing And Annotation

Genomic DNA extraction was performed using FavorPrep™ Blood Genomic DNA Extraction Mini Kit (FAVORGEN- Europe). For bacterial genome sequencing, the library preparation was performed using the Nextera™ DNA Flex Library Kit (Illumina, USA). The sequencing was performed on the Illumina MiSeq platform using 250 x 2 bp paired-end v2 chemistry. After sequencing, the paired-end reads were assessed for a quality check using FastQC (https://www.bioinformatics.babraham.ac.uk/projects/fastqc/). Plasmid SPAdes were run to predict the plasmid sequences, followed by removing all plasmid reads from paired-end raw reads using BBMap (v38.05 with default parameters), considering plasmid sequences as contamination. The filtered non-plasmid reads were then used for de novo genome assembly using the SPAdes pipeline (v3.11.1 using default parameters) (Bankevich et al. 2012).

Before genome annotation, the quality of genome assembly and summary statistics for both genomes were obtained using Quast (http://quast.sourceforge.net/quast.html). The assembled genomes of strains RTE1 and RTE4 were submitted to EzTaxon (Chun et al. 2007). The genomes were annotated using Rapid Annotations using Subsystems Technology (RAST) v4.0 (Aziz et al. 2008) and PATRIC (Pathosystems Resource Integration Center) (Synder et al. 2007). After the annotation was complete, the genome was browsed in a comparative environment of the SEED-Viewer. From both these pipelines, general information of both the genomes was predicted, such as protein-coding genes, structural RNAs (5S, 16S, and 23S), tRNAs, and small non-coding RNAs. Each genome was also submitted to the EggNOG database to obtain a more comprehensive annotation of the predicted genes (Huerta-Cepas et al. 2019).

Genome-based taxonomic identification was done using the Type (Strain) Genome server (TYGS: https://tygs.dsmz.de/) (Meier-Kolthoff & Göker, 2019) and Average Nucleotide Identity (ANI) between query genomes and identified type strains was calculated using fastANI (v1.33) (Jain et al. 2018).

The cultures RTE1 and RTE4 were deposited at the National Centre for Microbial Resource Pune, Maharashtra, India, under the accession numbers MCC 3938 (for RTE1) and MCC 3945 (for RTE4). The 16S rRNA gene and genome sequence was submitted to NCBI GenBank Database with accession numbers- MK530434 and GCA_014892615.1 (for RTE1) and MK530435 and GCA_014892595.1 (for RTE4).

Prediction Of Biosynthetic Gene Clusters

Specialized pipelines like antibiotics and secondary metabolite analysis SHell (antiSMASH) version 3.0.4 (Weber et al. 2015) were used to predict and annotate genes involved in the production of secondary metabolites. The genomic data of strains RTE1 and RTE4 were mapped against the known biosynthetic gene clusters available in the database, and the presence of genes in each cluster was validated from the annotation data of the respective genome.

The presence of specific genes related to Induced Systemic Resistance (ISR), PGP activity, and those involved in QS was checked in the annotations obtained from PATRIC and EggNOG databases. The gene annotations thus obtained were further used to predict genes involved in the metabolic pathways using KEGG Mapper reconstruct tool (Kanehisa & Goto, 2000).

Results

Plant growth promotion, biocontrol, and AHL production traits of rhizobacteria

Of thirty-one rhizobacteria isolated from the tea rhizospheric soil, ten isolates showed promising results in most PGP activities tested (Table 1).

Table 1
Illustration of the plant growth promoting (PGP) traits, AHL activity and Biofilm forming ability of isolates from tea rhizosphere of Assam. IAA: Indole acetic acid production; PSB: Phosphate solubilization; Pro: Protease production; CMC: Cellulase production, CTN: Chitinase production. Tea fungal pathogens: *Corticium invisium* and *Fusarium solani*, CV026: *Chromobacterium violaceum* CV026, jBA132: *E. coli* MT 102 (jBA132), TM: Tube method, CRA: Congo Red Agar method, MTA: Microtitre Plate assay

		PGP Traits					Biocontrol Assay		AHL- Assay		Biofilm Assay		
S.No	Isolates	IAA	PSB	PRO	CMC	CTN	C. invisium	F. solani	CV026	jBA 132	TM	CRA	MTA
1	I1	+	-	+++	++	+	-	-	-	-	+	-	-
2	I3	-	+++	+	+	+	-	-	-	-	+	-	-
3	I4	++	-	+++	-	+++	-	-	-	-	-	+	-
4	AE3	+	++	++	++	-	-	-	-	-	-	+	-
5	AE5	+++	+	+++	+	+++	-	-	-	-	-	+	-
6	**RTE1**	**++**	**+++**	**++**	**-**	**+**	**-**	**++**	**-**	**+++**	**++**	**-**	**+++**
7	**RTE4**	**+++**	**++**	**++**	**++**	**+++**	**+++**	**+++**	**+++**	**+++**	**++**	**-**	**+++**
8	RP1	+	-	+++	-	-	-	-	-	-	+	-	-
9	K10	+	++	+++	-	+	-	-	-	-	-	+	-
10	M23	+++	+	++	++	-	-	-	-	-	+	+	-

While RTE4 showed strong biocontrol activity against both fungal pathogens *C. invisium* and *F. solani* associated with the tea plant (Chopra et al. 2020 a). RTE1 showed antagonism only against *F. solani*. Other isolates did not show any antagonism against the fungal pathogens. Only RTE1 and RTE4 (of the ten isolates) were AHL producers (Table 1). RTE4 induced violacein pigment production in biosensor *C. violaceum* CV026 indicative of short-chain AHL production by RTE4 (Fig. 1a). Both RTE1 and RTE4 induced fluorescence in biosensor *E. coli* MT 102 (jBA132) (Fig. 1c and d)

Biofilm Formation

All ten isolates were evaluated for biofilm formation through qualitative and quantitative methods. In the test tube method, RTE1 and RTE4 showed moderate and strong biofilm activities, respectively. In the microtiter plate assay, RTE4 formed strongly adherent biofilm, while RTE1 formed moderately adherent biofilm (Table 1). When observed under CLSM, with DAPI stain, the Z stack revealed 18 and 23 µm thick biofilm formation by RTE1 and RTE4, respectively (Supplementary Fig. S1).

Taxonomic Identification:

The taxonomic identification analysis based on dDDH and ANI calculation exhibited the highest score values for strain RTE1 to '*Burkholderia reimsis*' BE51, followed by *Burkholderia cepacia* ATCC 25416^T, while for the strain RTE4, the highest values were *Pseudomonas aeruginosa* DSM 50071^T (Supplementary Table S1; Supplementary Fig. S2).

The quality assessment of genomes using QUAST showed that the size of the assembled genome for strain RTE1 was around 7.11 Mb and that for strain RTE4 was around 6.32 Mb, with a high GC content of 66.77% and 66.49%, respectively (Supplementary Table S2). The TruBac database confirmed the identification of strain RTE1 as *B. cepacia* and RTE4 as *P. aeruginosa*.

Growth Kinetics And Total Viable Count (Tvc) Of Strains

Growth kinetics and TVC of strains helped to unveil the time points at which AHL is likely to be produced by the individual bacterium in LB media. For RTE1, TVC was highest at 44th h. The time frame for the mid-log - early stationary phase for RTE1 was from 27 to 44 h. On the other hand, TVC for RTE4 was highest during the 22nd h. A gradual decline in TVC was observed in the later hours, indicating the decline in the growth phases of the strains. In the case of RTE4, the mid-log – early stationary phase exists from 12 to 26 h, and the decline phase starts at 30 h. AHL extraction was conducted at different time points viz; 24, 27, 30, 40, and 44 h from RTE1 and 12, 18, 24, and 30 h from RTE4 for determining the type of AHL molecules secreted at different time points. The extraction of RTE4 AHL was also conducted at 6 h to check if a bacterium starts AHL production when it enters its log phase.

Detection Of Ahl Molecules

After extraction of AHL molecules, the extracts were added to biosensor broth. Microscopic observation revealed that extract at 24 h did not induce gfp whereas biosensors emitted strong fluorescence in the presence of extracts at 27, 30, and 40 h, and fluorescence intensity gradually declined at 42 and 44 h. The unexposed biosensor (Control) showed no fluorescence. Synthetic AHL molecules tested (C8 and C12-AHL) were also able to induce fluorescence in the biosensor broth. This confirmed the presence of AHL molecules in the culture supernatant extract.

In RTE4, RP-TLC showed that at 6th h, there was no AHL production. The production started at 12th h and continued till 30th h. At this range, production of C6-AHL and oxo-C6-AHL was evident at each hour as the extract spots corresponded to spots developed by synthetic AHL molecules C6 and oxo-C6 (Fig. 2).

Chemical Characterization Of Ahls Using Lc-ms

The extracts of strain RTE1 at 30, 40, and 44 h showed the presence of C8-AHL (*m/z* 228.15) and C12-AHL (*m/z* 284.13) (Fig. 3a and b). The retention time in all three extracts was 18.9–19.3 min for C8-AHL and 12.5–13.0 min for C12- AHL. Additionally, the fragment ion of *m/z* 102.05 indicated a lactone ring. The TLC assay revealed that AHL profiles of strain RTE4 from 12 to 30 h were identical, and we chose the extract of 24 h for characterization by LC-MS. Faint bands of oxo-C6 AHL were observed on the TLC of RTE4 extract (Fig. 2). However, its presence was not confirmed by LCMS analysis. In RTE4, fragment ions *m/z* 102.03 confirmed a lactone ring in the extract (Fig. 3c). The fragmentation of the extract indicated the presence of C4-AHL (m/z 172.14). (Fig. 3d), confirmed the production of short-chain AHLs (C4 and C6), which indicated the presence of C6-AHL (*m/z* 200.11) in *P. aeruginosa* RTE4 (Fig. 3e).

Prediction Of Secondary Metabolite Biosynthesis Gene Clusters

The genome sequence of both strains searched on antiSMASH predicted the presence of 16 and 15 secondary metabolite biosynthesis genomic clusters for RTE1, and RTE4, respectively. The gene cluster included a biosynthetic gene, 'N-acyl homoserine lactone synthase' was found in the genomes of both strains (Fig. 4a and b). The genes in these clusters showed 97.0% similarity with that of *Burkholderia* sp. A9 for RTE1, and 99.50% similarity with the genes of *P. aeruginosa* ATCC 15692 for RTE4. The clusters from both strains also included an autoinducer-binding transcriptional regulator.

Furthermore, the RTE1 genome also had biosynthetic gene clusters for Terpenes production with 100% similarity with the known clusters from *B. cepacia* ATCC 25416. The pyochelin cluster predicted as the Non-Ribosomal Peptide Synthetase (NRPS) complex

consisted of 2 core biosynthetic genes *pchE* and *pchF*, while 3 transport-related genes, *pchH-pchJ*. (Fig. 4c and d). Further, it was noted that the terpene biosynthetic gene cluster predicted in RTE1 was comprised of gene *SQCY_1*, which encodes for a terpene cyclase family protein, along with a gene encoding for an isoprenoid biosynthesis C1 superfamily protein. In addition to the AHL biosynthetic gene cluster, RTE4 also possessed gene clusters for Pyochelin and Pyocyanin production, as shown in (Fig. 4e and f). RTE4 possessed a *phzA/B* gene complex which was found to be highly similar to the known biosynthetic gene cluster for pyocyanin production from *P.* a*eruginosa* PAO1.

Prediction Of Genes And Pathways

The presence of several genes responsible for different PGP activity, ISR, and quorum sensing in the genomes of strains RTE1 and RTE4 was found using the annotation files obtained from PATRIC and EggNOG databases listed in Supplementary Table S3.

The gene annotation data were used to reconstruct the pathways to get better insights into the pathways for the QS in RTE1 and RTE4 using KEGG map id: map 02024. Specifically, the genome of RTE1 possessed genes involved in the production of Acyl homoserine lactone synthase (*CepI* and *CciI*) and the associated transcriptional regulators (*CepR*, *CciR*). Besides, the genes encoding for a diffusible signal factor such as *RpfF* were also present along with the genes involved in biofilm formation such as *BapA* and *BclI*, indicating and validating the ability of RTE1 for biofilm production through pathways regulated through QS mechanisms (Fig. 5a).

On analyzing the genome of RTE4, an AHL production pathway involved in acyl-homoserine lactone synthase encoded by *LasI* and autoinducer transcriptional regulator *LasR* was observed. The genes involved in the production of rhamnolipid were also present, specifically comprised of *RhlI* (acyl-homoserine lactone synthase) and transcriptional regulator *RhlR* with a *RhlABC* gene cluster that encodes for Rhamnosyltransferase subunits A, B, and C respectively. RTE4 also possessed genetic machinery for phenazine pyocyanin production. The phenazine biosynthesis cluster specifically included genes such as *PhzA/B* (phenazine biosynthesis protein), *phzC* (3-deoxy-7-phosphoheptulonate synthase), *phzD* (trans-2,3-dihydro-3-hydroxyanthranilic acid synthase), *phzE* (2-amino-4-deoxychorismate synthase), *phzF* (trans-2,3-dihydro-3-hydroxyanthranilate isomerase), and *PhzG* (dihydrophenazine dicarboxylate synthase) (Fig. 5b).

Additionally, the presence of genes and associated pathways involved in bacterial secretion systems was assessed using KEGG map id: map03070. It was observed that the *B. cepacian* RTE1 predominantly possessed genes involved in Type II, Type IV, and Type VI secretory systems and lacked the majority of genes for the Type III secretion system (Fig. 6a). While *P. aeruginosa* RTE4 possessed genes predominantly for Type II, Type III, and Type VI secretory systems, as shown in Fig. 6b. Overall, this analysis confirmed the ability of the strains for AHL production and other bioactive molecules such as pyocyanin phenazine, etc., which are known to be involved in triggering induced systemic resistance in plants.

Discussion

Over 80% of the people consume tea, and Assam tea is one of the most recognized. Because of the climatic conditions of the tea-growing regions, around 15–30% crop loss is incurred by the tea industry due to biotic stress (http://www.teaboard.gov.in/pdf/PPC_Version_14_pdf396.pdf). Chemical fertilizers used to manage pests, weeds, and diseases eventually cause serious environmental concerns (Chandini et al. 2019). PGPR are emerging as potential candidates which can replace chemical fertilizers. Plant-microbe association is expected to assist plants in accessing nutrients and surviving during biotic and abiotic stress conditions (Smith et al. 2015). The selective screening of rhizobacteria having multifarious plant growth-promoting activity, including biofilm development and biocontrol, can contribute to the search for rhizobacteria, which can efficiently colonize and survive in the rhizosphere (Ansari and Ahmad, 2018). Several PGPR produces AHL, which influences the microbe-microbe and plant-microbe interactions and ultimately improves plant growth and health (Hartmann, 2020). In the current study, all tested strains showed potential in the majority of the PGP traits screened, while two strains, including *P. aeruginosa* RTE4 and *B. cepacia* RTE1, inhibited the growth of tea pathogenic fungi, making them worthy candidates for further studies. Additionally, these strains also produce AHL-like molecules and form biofilms. The thickness of the biofilm formed by *P. aeruginosa* RTE4 (23 μm) is more compared to other rhizobacterial strains of *P. entomophila* FAP1 (4.09 μm) (Ansari and Ahmad, 2018). These traits might be controlled through quorum-sensing regulation since other non-AHL-producing isolates were neither able to form biofilm nor had biocontrol activity under given conditions. The presence of diverse rhizobacteria in the acidic tea rhizosphere makes it remarkable to explore the function and profile of different AHL signaling molecules.

AHL extraction is carried out at different time points because some strains may produce lactonases, or a change in pH of the growth media may degrade the AHLs produced (Yates et al. 2002). Throughout the study, a pH of 5-5.5 was maintained because AHLs are stable at acidic pH (Horswill et al. 2007). One of the characteristics of AHL molecule is the presence of a lactone ring at *m/z* 102 in mass spectroscopy (Patel et al. 2016) which we found in LCMS analysis of RTE1 and RTE4. Production of C8-AHL from log to stationary phase in *B. cepacia* RTE1 is as per the study conducted by Le Guillouzer et al. 2017 where C8-AHL in *B. thailandensis* E264 accumulated only during the logarithmic phase and remained stable till the stationary phase. The genome of *P. aeruginosa* RTE4 showed the presence of the acylase gene and AHL synthase for the production of oxo-C12-AHL, but in RTE4 extract, oxo-C12-AHL was found neither in RP-TLC nor in LCMS assays. oxo-C12 AHL causes inhibition in the growth of the primary root of *A. thaliana* (Ortiz-Castro et al. 2011), and in the case of humans, it is reported to be responsible for virulence and pathogenesis caused by *P. aeruginosa* (Smith et al. 2002). Interestingly, members of the genus *Pseudomonas* are capable of degrading their oxo-C12 AHLs (Huang et al. 2003). It is likely that *P. aeruginosa* RTE4 also degrades its oxo-C12-AHL.

Interestingly, both the strains *B. cepacia* RTE1 and *P. aeruginosa* RTE4 possess enzymatic machinery for AHL production, as evident from the presence of key genes, *CepI* and *CepR* (in *Burkholderia*) and *LasI* and *LasR* (in *Pseudomonas*). Our previous study on BS production in *P. aeruginosa* RTE4 (Chopra et al. 2020a) is also validated by KEGG pathway analysis which shows that rhamnosyl transferase gene clusters RhlA, RhlB, and RhlC are regulated through the quorum sensing pathways by the RhlI (acyl-homoserine lactone synthase) and RhlR the autoinducer family transcriptional. The secondary metabolite prediction analysis by the antiSMASH tool revealed the presence of genes involved in AHL production, which further confirms the quorum sensing ability of the strain RTE1 and RTE4.

Another set of genes involved in the production of salicylic acid derivative pyochelin, phenazine pyocyanin, were found in the genome of both strains. RTE4 included a gene cluster with genes PhzA/B complex responsible for phenazine biosynthesis. which confirms the biocontrol potential of strain *P. aeruginosa* RTE4 against tea fungal pathogens (Chopra et al. 2020a). It is also known that the redox-active pyocyanin acts as a potent antimicrobial agent against known plant pathogens, indicating/justifying the probable biocontrol activity of the strain RTE4. Although there have been similar reports, it is also important to note that, to the best of our knowledge, there are no previous reports from rhizospheric isolates associated with tea plants. Furthermore, the presence of terpenes synthesis-related gene clusters in *B. cepacia* RTE1, such as the *SQCY_1* (a gene encoding for terpene cyclase family protein) and isoprenoid biosynthesis C1 superfamily, indicated its ability in terpenes production. Previous reports suggest volatile Compounds (VOCs) such as terpenoids and sesquiterpenes elicit ISR in plants (De Vleesschauwer & Höfte, 2009). Both strains (RTE1 and RTE4) possessed gene '*als'* related to Acetoin and Butandiol synthesis, which has been reported to act as an ISR elicitor in plants (Rudrappa et al. 2010). Although *B. cepacia* and *P. aeruginosa* are opportunistic pathogens and have been associated with several infections (Coutinho 2011; Winstanley et al. 2016). However, the genome analysis of strain RTE1 exhibited that the bacterium lacked a Type III secretion system, considered a hallmark genetic cluster involved in mammalian pathogenesis (Angus et al. 2014). Similar observation on the lack of Type III has been observed in several other plant-associated *Burkholderia* species, indicating the genomic adaptations to the environmental factors (Kandel et al. 2017). Besides the possibility of opportunistic pathogens, *B. cepacia* and *P. aeruginosa are* often found in plant rhizosphere and have been reported for their plant growth properties (Tiwary and Dubey, 2018; Jung et al. 2018). Thus, it is evident that these bacterial genera are known to be effective in plant growth promotion and triggering and inducing systemic resistance in plants. However, it is also important to perform detailed investigations to test their pathogenesis *in-vivo* and *in-vitro* experiments.

Declarations

Acknowledgments: We gratefully acknowledge Dr. Jens Bo Andersen, the University of Copenhagen, for his consent to work with biosensor *E.coli* MT 102 (jBA132), to Dr. Kamlesh Jangid for providing us with AHL molecules. We also express our heartfelt gratitude to Dr. Milind Patole for providing us with the facility to conduct biofilm assays at the bioimaging facility, NCCS.

Statements and Declarations

Funding: SS would like to express special thanks to Rashtriya Uchchattar Shiksha Abhiyan (Reference No: RUSA-CBS-TH- 3.2) for financial support. PM is thankful to DBT, the Government of India, for financial support under the Major Research Project (Reference No: BT/222/NE/TBP/11). PR is thankful to the Department of Biotechnology project (BT/Coord. II/01/03/2016).

Author contributions: AC and DM performed the experiments. All authors designed the study and analysed the results. AC, DM, and PR wrote the entire manuscript. All authors read and approved the final manuscript.

Data availability: The genome sequences for strain RTE1 and RTE4 are deposited to the National Centre for Biotechnology Information (NCBI) Genome under the Bio project PRJNA665558 with GenBank assembly accession GCA_014892615.1 and GCA_014892595.1, and 16S rRNA gene accession numbers MK530434 and MK530435, respectively. Other details are available in the article's Supplementary material.

Ethical approval: This article does not contain any studies with human participants or animals performed by any of the authors

Conflicts of interest: No conflict of interest declared

References

1. Andersen JB, Heydorn A, Hentzer M, Eberl L, Geisenberger O, Christensen BB, Molin S, Givskov M (2001) Gfp-Based N-Acyl Homoserine-Lactone Sensor Systems for Detection of Bacterial Communication. Appl Environ Microbiol 67(2):575–585. doi.org/10.1128/AEM.67.2.575-585.2001
2. Angus AA, Agapakis CM, Fong S, Yerrapragada S, Estrada-de los Santos P, Yang P, Song N, Kano S, Caballero-Mellado J, de Faria SM, Dakora FD, Weinstock G, Hirsch AM (2014) Plant-Associated Symbiotic *Burkholderia* Species Lack Hallmark Strategies Required in Mammalian Pathogenesis. PLoS ONE 9:e83779. doi.org/10.1371/journal.pone.0083779
3. Ansari FA, Ahmad I (2018) Biofilm Development, Plant Growth Promoting Traits and Rhizosphere Colonization by *Pseudomonas entomophila* FAP1: A Promising PGPR. Adv Microbiol 08(03):235–251. doi.org/10.4236/aim.2018.83016
4. Aziz RK, Bartels D, Best AA (2008) The RAST Server: Rapid Annotations using Subsystems Technology. BMC Genom 9(75). doi.org/10.1186/1471-2164-9-75
5. Bankevich A, Nurk S, Antipov D, Gurevich AA, Dvorkin M, Kulikov AS, Lesin VM, Nikolenko SI, Pham S, Prjibelski AD, Pyshkin AV, Sirotkin AV, Vyahhi N, Tesler G, Alekseyev MA, Pevzner PA (2012) SPAdes: A New Genome Assembly Algorithm and Its Applications to Single-Cell Sequencing. J Comput Biol 19(5):455–477. doi.org/10.1089/cmb.2012.0021
6. Gulati A, Rahi P, Vyas P (2008) Characterization of Phosphate-Solubilizing Fluorescent Pseudomonads from the Rhizosphere of Seabuckthorn Growing in the Cold Deserts of Himalayas. Curr Microbiol 56(1):73–79. doi.org/10.1007/s00284-007-9042-3
7. Stepanović S, Vuković D, Dakić I, Savić B, Švabić-Vlahović M (2000) A modified microtiter-plate test for quantification of staphylococcal biofilm formation. J Microbiol Methods 40(2):175–179. doi.org/10.1016/S0167-7012(00)00122-6
8. Bag S, Mondal A, Banik A (2022) Exploring tea (*Camellia sinensis*) microbiome: Insights into the functional characteristics and their impact on tea growth promotion. Microbiol Res 254:126890. doi.org/10.1016/j.micres.2021.126890
9. Bai X, Todd CD, Desikan R, Yang Y, Hu X (2012) N-3-Oxo-Decanoyl-L-Homoserine-Lactone Activates Auxin-Induced Adventitious Root Formation via Hydrogen Peroxide- and Nitric Oxide-Dependent Cyclic GMP Signaling in Mung Bean. Plant Physiol 158(2):725–736. doi.org/10.1104/pp.111.185769
10. Balasundararajan V, Dananjeyan B (2019) Occurrence of diversified *N*-acyl homoserine lactone mediated biofilm-forming bacteria in rice rhizoplane. J Basic Microbiol 59(10):1031–1039. doi.org/10.1002/jobm.201900202
11. Bankevich A, Nurk S, Antipov D, Gurevich AA, Dvorkin M, Kulikov AS, Lesin VM, Nikolenko SI, Pham S, Prjibelski AD, Pyshkin AV, Sirotkin AV, Vyahhi N, Tesler G, Alekseyev MA, Pevzner PA (2012) SPAdes: A New Genome Assembly Algorithm and Its Applications to Single-Cell Sequencing. J Comput Biol 19(5):455–477. https://doi.org/10.1089/cmb.2012.0021
12. Bhattacharyya C, Bakshi U, Mallick I, Mukherji S, Bera B, Ghosh A (2017) Genome-Guided Insights into the Plant Growth Promotion Capabilities of the Physiologically Versatile *Bacillus aryabhattai* Strain AB211. Front Microbiol 8. doi.org/10.3389/fmicb.2017.00411
13. Bhattacharyya C, Banerjee S, Acharya U, Mitra A, Mallick I, Haldar A, Haldar S, Ghosh A, Ghosh A (2020) Evaluation of plant growth promotion properties and induction of antioxidative defense mechanism by tea rhizobacteria of Darjeeling, India. Sci Rep 10(1):15536. doi.org/10.1038/s41598-020-72439-z
14. Chakraborty U, Chakraborty BN, Chakraborty AP, Sunar K, Dey PL, Laboratory IP (2013) Plant growth promoting rhizobacteria mediated improvement of health status of tea plants.Indian J Biotechnol, 12
15. Chandini KR, Kumar R, Prakash O (2019) The impact of chemical fertilizers on our environment and ecosystem, in Research Trends in Environmental Sciences. 2nd Edn. ed. P. Sharma (India, New Delhi: AkiNik Publications), 71–85

16. Ch'ng HY, Ahmed OH, Majid NM Ab (2014) Improving Phosphorus Availability in an Acid Soil Using Organic Amendments Produced from Agro industrial Wastes. Sci World J 1–6. doi.org/10.1155/2014/506356
17. Chopra A, Bobate S, Rahi P, Banpurkar A, Mazumder PB, Satpute S (2020) *Pseudomonas aeruginosa* RTE4: A Tea Rhizobacterium with Potential for Plant Growth Promotion and Biosurfactant Production. Front Bioeng Biotechnol 8:861. doi.org/10.3389/fbioe.2020.00861
18. Chopra A, Kumar Vandana U, Rahi P, Satpute S, Mazumder PB (2020) Plant growth promoting potential of *Brevibacterium sediminis* A6 isolated from the tea rhizosphere of Assam, India. Biocatal Agric Biotechnol 101610. doi.org/10.1016/j.bcab.2020.101610
19. Christensen GD, Simpson WA, Younger JJ, Baddour LM, Barrett FF, Melton DM, Beachey EH (1985) Adherence of coagulase-negative staphylococci to plastic tissue culture plates: A quantitative model for the adherence of staphylococci to medical devices. J Clin Microbiol 22(6):996–1006. doi.org/10.1128/JCM.22.6.996-1006.1985
20. Chu WH (2007) Optimization of extracellular alkaline protease production from species of Bacillus. J Ind Microbiol Biotechnol 34:241–245. doi.org/10.1007/s10295-006-0192-2
21. Chun J, Lee JH, Jung Y, Kim M, Kim S, Kim BK, Lim YW (2007) EzTaxon: a web-based tool for the identification of prokaryotes based on 16S ribosomal RNA gene sequences. Int J Syst Evol Microbiol Oct 57(Pt 10):2259–2261. doi:10.1099/ijs.0.64915-0
22. Coutinho CP (2011) Long-term colonization of the cystic fibrosis lung by *Burkholderia cepacia* complex bacteria: Epidemiology, clonal variation, and genome-wide expression alterations. Front Cell Infect Microbiol 1:12. doi.org/10.3389/fcimb.2011.00012
23. De Vleesschauwer D, Höfte M (2009) Chap. 6 Rhizobacteria-Induced Systemic Resistance, in: Adv Bot Res Elsevier, pp. 223–281. https://doi.org/10.1016/S0065-2296(09)51006-3
24. Dey R, Pal KK, Bhatt DM, Chauhan SM (2004) Growth promotion and yield enhancement of peanut (*Arachishypogaea* L.) by application of plant growth promoting rhizobacteria. Microbiol Res 159:371–394. doi.org/10.1016/j. micres.2004.08.004
25. Dhar Purkayastha G, Mangar P, Saha A, Saha D (2018) Evaluation of the biocontrol efficacy of a *Serratia marcescens* strain indigenous to tea rhizosphere for the management of root rot disease in tea. PLoS ONE 13(2):e0191761. doi.org/10.1371/journal.pone.0191761
26. Dutta J, Handique PJ, Thakur D (2015) Assessment of Culturable Tea Rhizobacteria Isolated from Tea Estates of Assam, India for Growth Promotion in Commercial Tea Cultivars. Front Microbiol 6:1252. doi: 10.3389/fmicb.2015.01252
27. El-Sayed WS, Akhkha A, El-Naggar MY, Elbadry M (2014) In vitro antagonistic activity, plant growth promoting traits and phylogenetic affiliation of rhizobacteria associated with wild plants grown in arid soil. Front Microbiol 5:651. doi: 10.3389/fmicb.2014.00651
28. Fuqua C, Greenberg E (2002) Listening in on bacteria: acyl-homoserine lactone signalling. Nat Rev Mol Cell Biol 3:685–695. doi.org/10.1038/nrm907
29. Gulati A, Rahi P, Vyas P (2008) Characterization of phosphate-solubilizing fluorescent pseudomonads from the rhizosphere of seabuckthorn growing in the cold deserts of himalayas. Curr Microbiol 56:73–79. doi.org/10.1007/s00284-007-9042-3
30. Gupta P, Samant K, Sahu A (2012) Isolation of cellulose-degrading bacteria and determination of their cellulolytic potential. Int J Microbiol 578925. doi.org/10.1155/2012/578925
31. Haque MM, Mosharaf MK, Khatun M, Haque MA, Biswas MS, Islam MS, Islam MM, Shozib HB, Miah MMU, Molla AH, Siddiquee MA (2020) Biofilm Producing Rhizobacteria With Multiple Plant Growth-Promoting Traits Promote Growth of Tomato Under Water-Deficit Stress. Front Microbiol 11:542053. doi: 10.3389/fmicb.2020.542053
32. Hartmann A (2020) Quorum sensing N-acyl-homoserine lactone signal molecules of plant beneficial Gram-negative rhizobacteria support plant growth and resistance to pathogens. Rhizosphere 16:100258. doi.org/10.1016/j.rhisph.2020.100258
33. Horswill AR, Stoodle P, Stewart PS (2007) The effect of the chemical, biological, and physical environment on quorum sensing in structured microbial communities. Anal Bioanal Chem 387:371–380. doi.org/10.1007/s00216-006-0720-y
34. Huerta-Cepas J, Szklarczyk D, Heller D, Hernández-Plaza A, Forslund SK, Cook H, Mende DR, Letunic I, Rattei T, Jensen LJ, von Mering C, Bork P (2019) eggNOG 5.0: A hierarchical, functionally and phylogenetically annotated orthology resource based on 5090 organisms and 2502 viruses. Nucleic Acids Res 47(D1):D309–D314. doi.org/10.1093/nar/gky1085
35. Huang JJ, Han JI, Zhang LH, Leadbetter JR (2003) Utilization of Acyl-Homoserine Lactone Quorum Signals for Growth by a Soil Pseudomonad and *Pseudomonas aeruginosa* PAO1. AEM 69, 5941–5949. doi.org/10.1128/AEM.69.10.5941-5949.2003
36. Jain C, Rodriguez RLM, Phillippy AM (2018) High throughput ANI analysis of 90K prokaryotic genomes reveals clear species boundaries. Nat Commun 9:5114. doi.org/10.1038/s41467-018-07641-9

37. Jung BK, Hong SJ, Park GS, Kim MC, Shin JH (2018) Isolation of *Burkholderia cepacia* JBK9 with plant growth-promoting activity while producing pyrrolnitrin antagonistic to plant fungal diseases. Appl Biol Chem 61:173–180. doi.org/10.1007/s13765-018-0345-9
38. Jung BK, Khan AR, Hong SJ (2017) Quorum sensing activity of the plant growth-promoting rhizobacterium *Serratia glossinae* GS2 isolated from the sesame (*Sesamum indicum* L.) rhizosphere. Ann Microbiol 67:623–632. doi.org/10.1007/s13213-017-1291-1
39. Kandel SL, Firrincieli A, Joubert PM, Okubara PA, Leston ND, McGeorge KM, Mugnozza GS, Harfouche A, Kim S-H, Doty SL (2017) An In vitro Study of Bio-Control and Plant Growth Promotion Potential of Salicaceae Endophytes. Front Microbiol 8:386. doi: 10.3389/fmicb.2017.00386
40. Kanehisa M, Goto S (2000) KEGG: kyoto encyclopedia of genes and genomes. Nucleic Acids Res 28(1):27–30. doi.org/10.1093/nar/28.1.27
41. Khan T, Mahbub A, Mitra S, Ali NM, Biswas A, Islam T, Saha ML (2017) Rhizosphere associated bacteria and soil physico- chemical properties of tea garden. Bangladesh J Bot 46:1389–1396
42. Kuddus M, Ahmad IZ (2013) Isolation of novel chitinolytic bacteria and production optimization of extracellular chitinase. J Genet Eng Biotechnol 11:39–46. doi.org/10.1016/j.jgeb.2013.03.001
43. Le Guillouzer S, Groleau MC, Déziel E (2017) The Complex Quorum Sensing Circuitry of *Burkholderia thailandensis* Is Both Hierarchically and Homeostatically Organized. mBio 8(6):e01861–e01817. doi.org/10.1128/mBio.01861-17
44. Martinez S, Humery A, Groleau M-C, Déziel E (2020) Quorum Sensing Controls Both Rhamnolipid and Polyhydroxyalkanoate Production in *Burkholderia thailandensis* Through ScmR Regulation. Front Bioeng Biotechnol 8:1033. doi: 10.3389/fbioe.2020.01033
45. McClean KH, Winson MK, Fish L, Taylor A, Chhabra SR, Camara M, Daykin M, Lamb JH, Swift S, Bycroft BW, Stewart GSAB, Williams P (1997) Quorum sensing and *Chromobacterium violaceum*: exploitation of violacein production and inhibition for the detection of N-acylhomoserine lactones. Microbiology (Reading). 143. 10.1099/00221287-143-12-3703. Pt 12
46. Meier-Kolthoff JP, Göker M (2019) TYGS is an automated high-throughput platform for state-of-the-art genome-based taxonomy. Nat Commun 10:2182. doi.org/10.1038/s41467-019-10210-3
47. Nautiyal CS (1999) An efficient microbiological growth medium for screening phosphate solubilizing microorganisms. FEMS Microbiol Lett 170:265–270. doi.org/10.1111/j.1574-6968.1999.tb13383.x
48. O'Toole GA (2011) Microtiter Dish Biofilm Formation Assay. J Vis Exp 47:e2437. doi:10.3791/2437
49. Ortiz-Castro R, Díaz-Pérez C, Martínez-Trujillo M, del Río RE, Campos-García J, López-Bucio J (2011) Transkingdom signaling based on bacterial cyclodipeptides with auxin activity in plants. Proc Natl Acad Sci 108:7253–7258. doi.org/10.1073/pnas.1006740108
50. Pandey A, Singh S, Palni LMS (2013) Microbial inoculants to support tea industry in India. Indian J Biotechnol 12:13–19
51. Parsek MR, Val DL, Hanzelka BL, Cronan JE, Greenberg EP (1999) Acyl homoserine-lactone quorum-sensing signal generation. Proc.Natl. Acad. Sci.96(8), 4360–4365. https://doi.org/10.1073/pnas.96.8.4360
52. Patel NM, Moore JD, Blackwell HE, Amador-Noguez D (2016) Identification of Unanticipated and Novel N-Acyl L-Homoserine Lactones (AHLs) Using a Sensitive Non-Targeted LC-MS/MS Method. PLoS ONE 11:e0163469. https://doi.org/10.1371/journal.pone.0163469
53. Rahman A, Sitepu IR, Tang SY, Hashidoko Y (2010) Salkowski's reagent test as a primary screening index for functionalities of rhizobacteria isolated from wild dipterocarp saplings growing naturally on medium-strongly acidic tropical peat soil. Biosci Biotechnol Biochem 74:2202–2208. https://doi.org/10.1271/bbb.100360
54. Rudrappa T, Biedrzycki ML, Kunjeti SG, Donofrio NM, Czymmek KJ, Paul WP, Bais HP (2010) The rhizobacterial elicitor acetoin induces systemic resistance in *Arabidopsis thaliana*. Commun Integr Biol 3:130–138. https://doi.org/10.4161/cib.3.2.10584
55. Schikora A, Schenk ST, Hartmann A (2016) Beneficial effects of bacteria-plant communication based on quorum sensing molecules of the N -acyl homoserine lactone group. Plant Mol Biol 90(6):605–612. https://doi.org/10.1007/s11103-016-0457-8
56. Schuhegger R, Ihring A, Gantner S, Bahnweg G, Knappe C, Vogg G, Hutzler P, Schmid M, Van Breusegem F, Eberl L, Hartmann A, Langebartels C (2006) Induction of systemic resistance in tomato by N-acyl-L-homoserine lactone-producing rhizosphere bacteria. Plant Cell Environ 29(5):909–918. doi: 10.1111/j.1365-3040.2005.01471.x
57. Singh P, Kumar V, Agrawal S (2014) Evaluation of phytase producing bacteria for their plant growth promoting activities. Internet J Microbiol 1–7. doi.org/10.1155/2014/426483

58. Smith DL, Praslickova D, Ilangumaran G (2015) Inter-organismal signaling and management of the phytomicrobiome. Front Plant Sci 6:722. doi: 10.3389/fpls.2015.00722
59. Smith RS, Harris SG, Phipps R, Iglewski B (2002) The *Pseudomonas aeruginosa* Quorum-Sensing Molecule *N*-(3-Oxododecanoyl)Homoserine Lactone Contributes to Virulence and Induces Inflammation. Vivo J Bacteriol 184(4):1132–1139. doi.org/10.1128/jb.184.4.1132-1139.2002
60. Stepanović S, Vuković D, Dakić I, Savić B, Švabić-Vlahović M (2000) A modified microtiter-plate test for quantification of staphylococcal biofilm formation. J Microbiol Methods 40(2):175–179. doi.org/10.1016/S0167-7012(00)00122-6
61. Stintzi A, Evans K, Meyer JM, Poole K (1998) Quorum-sensing and siderophore biosynthesis in *Pseudomonas aeruginosa*: lasRI lasI mutants exhibit reduced pyoverdine biosynthesis. FEMS Microbiol Lett 166(2):341–345
62. Stover CK, Pham XQ, Erwin AL, Mizoguchi SD, Warrener P, Hickey MJ, Brinkman FS, Hufnagle WO, Kowalik DJ, Lagrou M, Garber RL, Goltry L, Tolentino E, Westbrock-Wadman S, Yuan Y, Brody LL, Coulter SN, Folger KR, Kas A, Larbig K, Olson MV (2000) Complete genome sequence of *Pseudomonas aeruginosa* PAO1, an opportunistic pathogen. Nature 406(6799):959–964. doi.org/10.1038/35023079
63. Snyder EE, Kampanya N, Lu J, Nordberg EK, Karur HR, Shukla M, Soneja J, Tian Y, Xue T, Yoo H, Zhang F, Dharmanolla C, Dongre NV, Gillespie JJ, Hamelius J, Hance M, Huntington KI, Jukneliene D, Koziski J, Mackasmiel L, Sobral BW (2007) PATRIC: the VBI PathoSystems Resource Integration Center. Nucleic acids Res 35(Database issue):D401–D406. doi.org/10.1093/nar/gkl858
64. Tiwary M, Dubey AK (2018) Characterization of Biosurfactant Produced by a Novel Strain of *Pseudomonas aeruginosa*, Isolate ADMT1. J Surfactants Deterg 21:113–125. doi.org/10.1002/jsde.12021
65. Viswanath G, Jegan S, Baskaran V, Kathiravan R, Prabavathy VR (2015) Diversity and N-acyl-homoserine lactone production by Gammaproteobacteria associated with *Avicennia marina* rhizosphere of South Indian mangroves. Syst Appl Microbiol 38(5):340–345. doi.org/10.1016/j.syapm.2015.03.008
66. Weber T, Blin K, Duddela S, Krug D, Kim HU, Bruccoleri R, Lee SY, Fischbach MA, Müller R, Wohlleben W, Breitling R, Takano E, Medema MH (2015) antiSMASH 3.0-a comprehensive resource for the genome mining of biosynthetic gene clusters. Nucleic acids Res 43(W1):W237–W243. doi.org/10.1093/nar/gkv437
67. Winstanley C, O'Brien S, Brockhurst MA (2016) *Pseudomonas aeruginosa* Evolutionary Adaptation and Diversification in Cystic Fibrosis Chronic Lung Infections. Trends Microbiol 24(5):327–337. doi.org/10.1016/j.tim.2016.01.008
68. Yates EA, Philipp B, Buckley C, Atkinson S, Chhabra SR, Sockett RE, Goldner M, Dessaux Y, Cámara M, Smith H, Williams P (2002) N-Acylhomoserine Lactones Undergo Lactonolysis in a pH-, Temperature-, and Acyl Chain Length-Dependent Manner during Growth of *Yersinia pseudotuberculosis* and *Pseudomonas aeruginosa*. IAI 70:5635–5646. doi.org/10.1128/IAI.70.10.5635-5646.2002

Figures

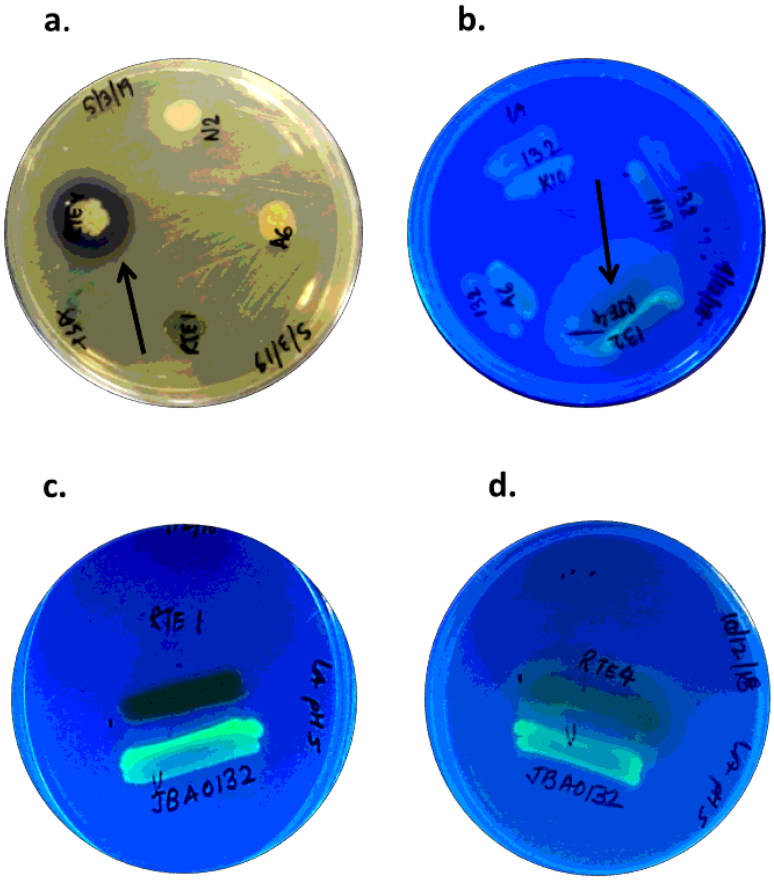

Figure 1

Plate assays for AHL production by rhizobacterial strains using bacterial biosensors: (a) AHL production detected in strain RTE4 using biosensor *C. violaceum* CV026; (b). AHL production using *gfp* based biosensor *E. coli* MT102 (jBA 132); (c) and (d) show strains RTE1 and RTE4, respectively, inducing fluorescence in biosensor *E. coli* MT102 (jBA 132).

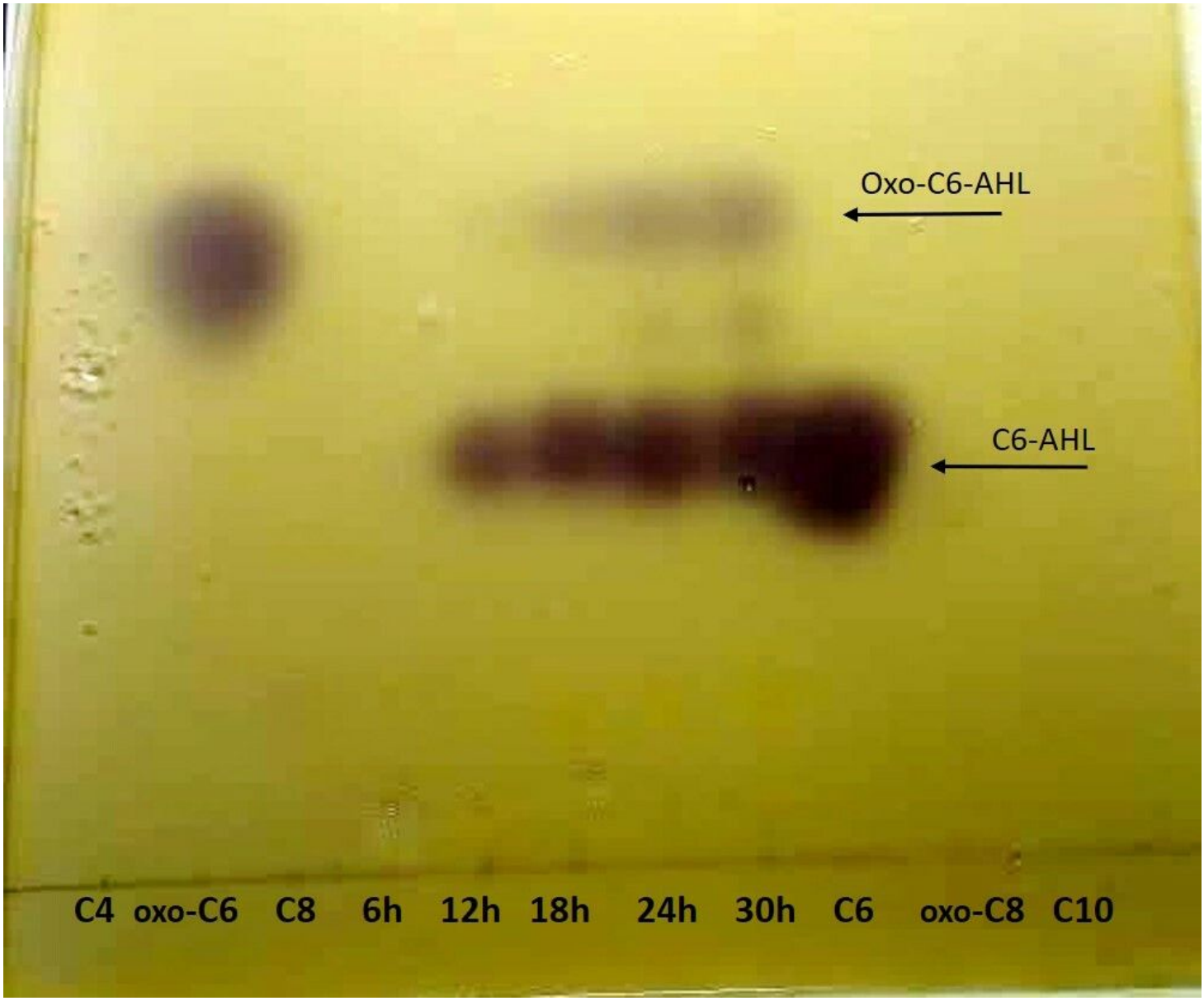

Figure 2

TLC analysis on reverse phase TLC plates visualized with biosensor *C. violaceum* CV026. Arrows indicate the positions of AHL standards run on the same plate.

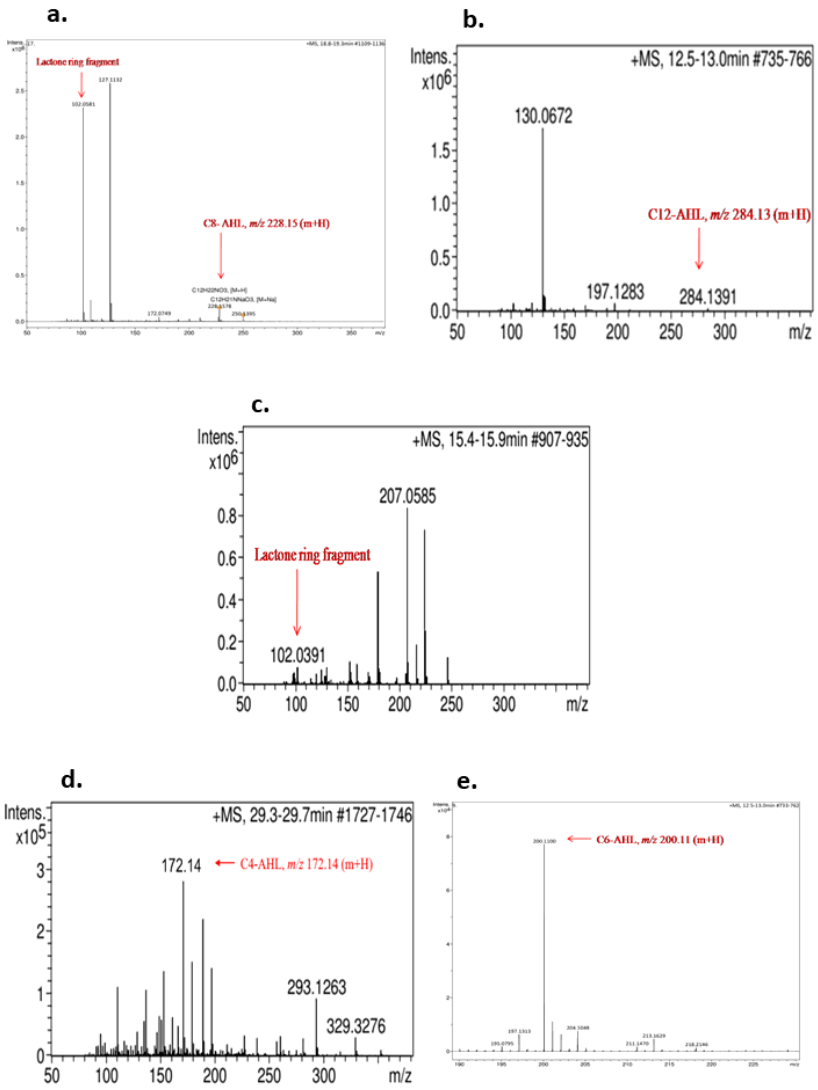

Figure 3

LCMS spectrum of AHLs. For RTE1 **(a)** Lactone ring fragment and C8-AHL, **(b)** C12-AHL. For RTE4 (c) Lactone ring fragment, **(d)** C4-AHL **(e)** C6-AHL.

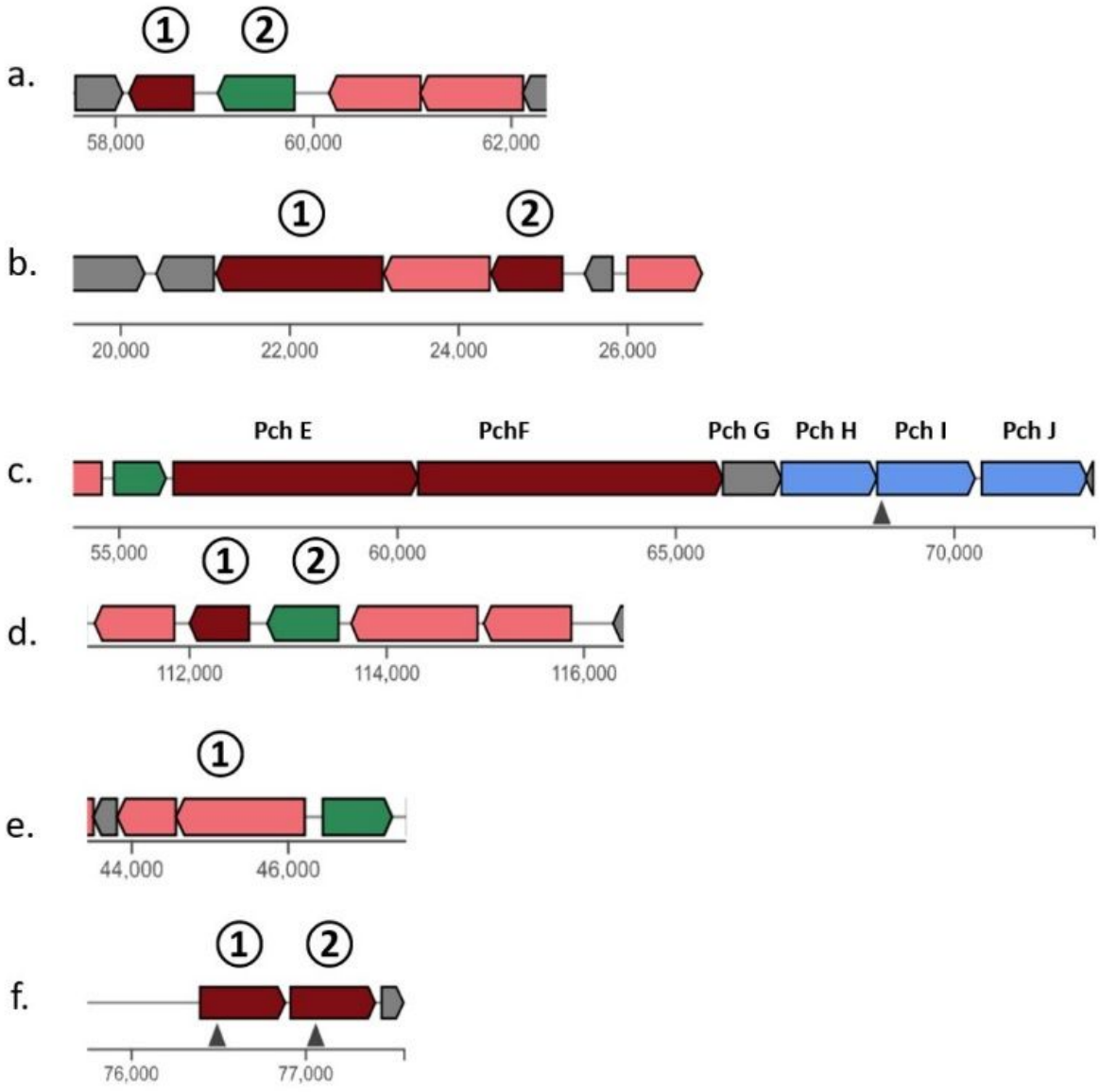

Figure 4

Biosynthetic gene clusters obtained from antiSMASH analysis in RTE1 (a-c) and RTE4 (d-f) (a) AHL gene cluster □ *LasI/CepI:* N- acyl-L homoserine lactone synthetase and □ *LasR/CepR*: AI: autoinducer-binding transcriptional regulator, **(b)** Terpenes synthesis gene cluster; □ *SQCY_1*: Terpene cyclase family protein and □ Isoprenoid biosynthesis C1 superfamily, **(c)** A Non-Ribosomal Peptide Synthetase (NRPS) complex for Pyochelin synthesis showing the presence of gene cluster *pchEFGHIJ*, **(d)** AHL gene cluster □ *LasI/CepI:* N- acyl-L homoserine lactone synthetase and □ *LasR/CepR*: AI: autoinducer-binding transcriptional regulator, **(e)** Pyochelin gene cluster; □ *pch*: pyochelin salicylate; **(f)** Pyocyanin gene cluster; □ and □ *phz A/B*: phenazine biosynthesis protein complex.

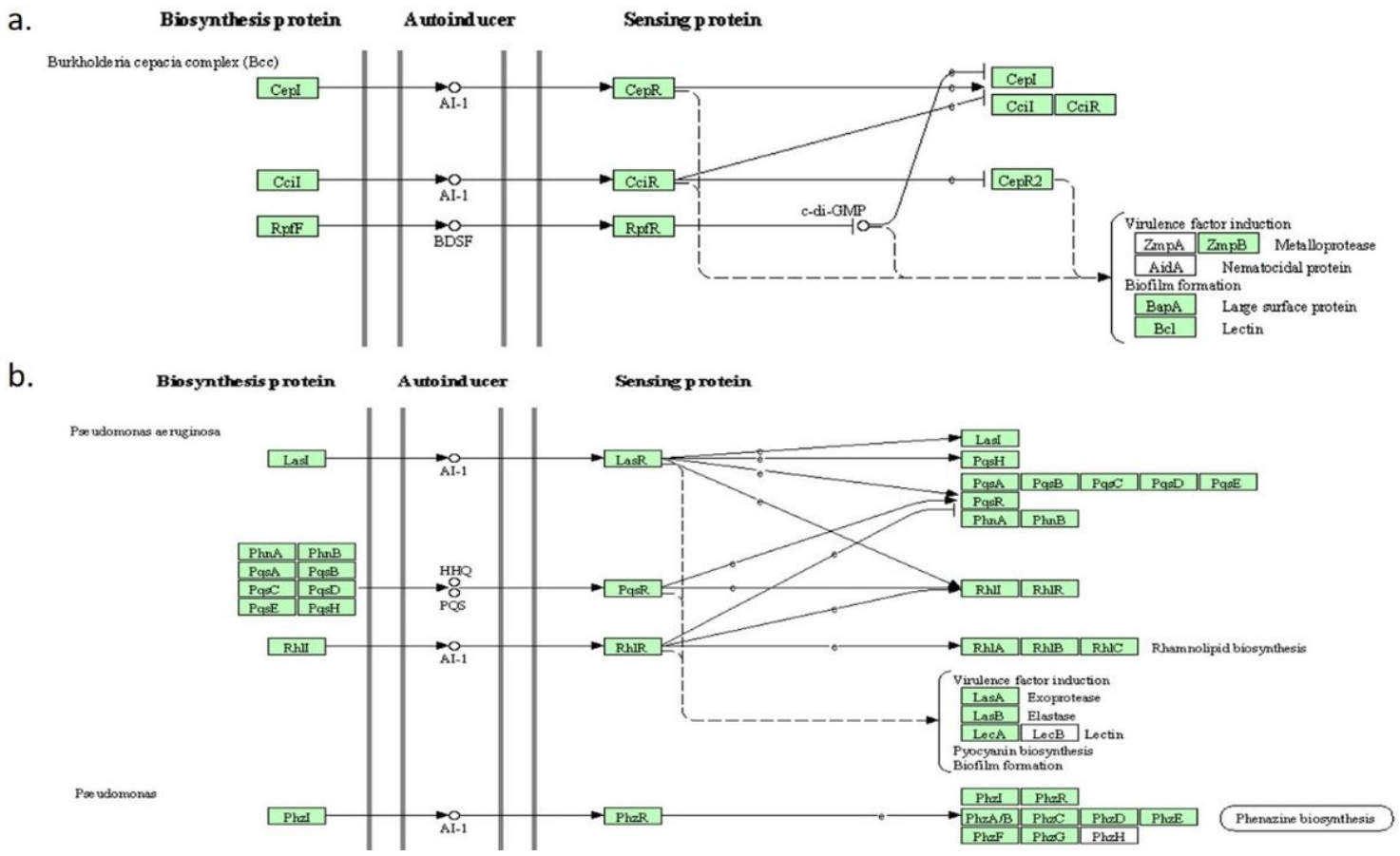

Figure 5

Bacterial metabolic pathway analysis using KEGG Mapper Reconstruct tool The genes in the green box indicate the genes present in strains (RTE1 and RTE4) compared to the reference bacterial pathway in the database **(a)** Presence of quorum sensing related genes in strain *B. cepacia* RTE1. *CepI* and *CciI*: Acyl homoserine lactone synthase, *CepR*, *CciR*, and *CepR2*: LuxR family transcriptional regulator, *RpfF*: Diffusible Signal factor (DSF) synthase, *RpfR*: c-di-GMP phosphodiesterase *Gmr*, *ZmpB*: Zinc metalloprotease, *BapA*: Large repetitive protein (involved in biofilm formation), Bcl: Mannose-binding lectin. **(b)** The presence of genes involved in producing AHL, phenazine, pyocyanin, and the biosurfactant rhamnolipid in the genome of strain *P. aeruginosa* RTE4. *LasI*, *RhlI*, *PhzI*: Acyl homoserine lactone synthase, *LasR*, *RhlI*, *PhzR*: *LuxR* family transcriptional regulator, *PqsABCDEH:* Quinolone synthase complex, anthranalinoyl transferase, *RhlABC*: Rhamnosyltransferase subunit A, B, C, *PhzA/B*, *CDE*: Phenazine biosynthesis proteins.

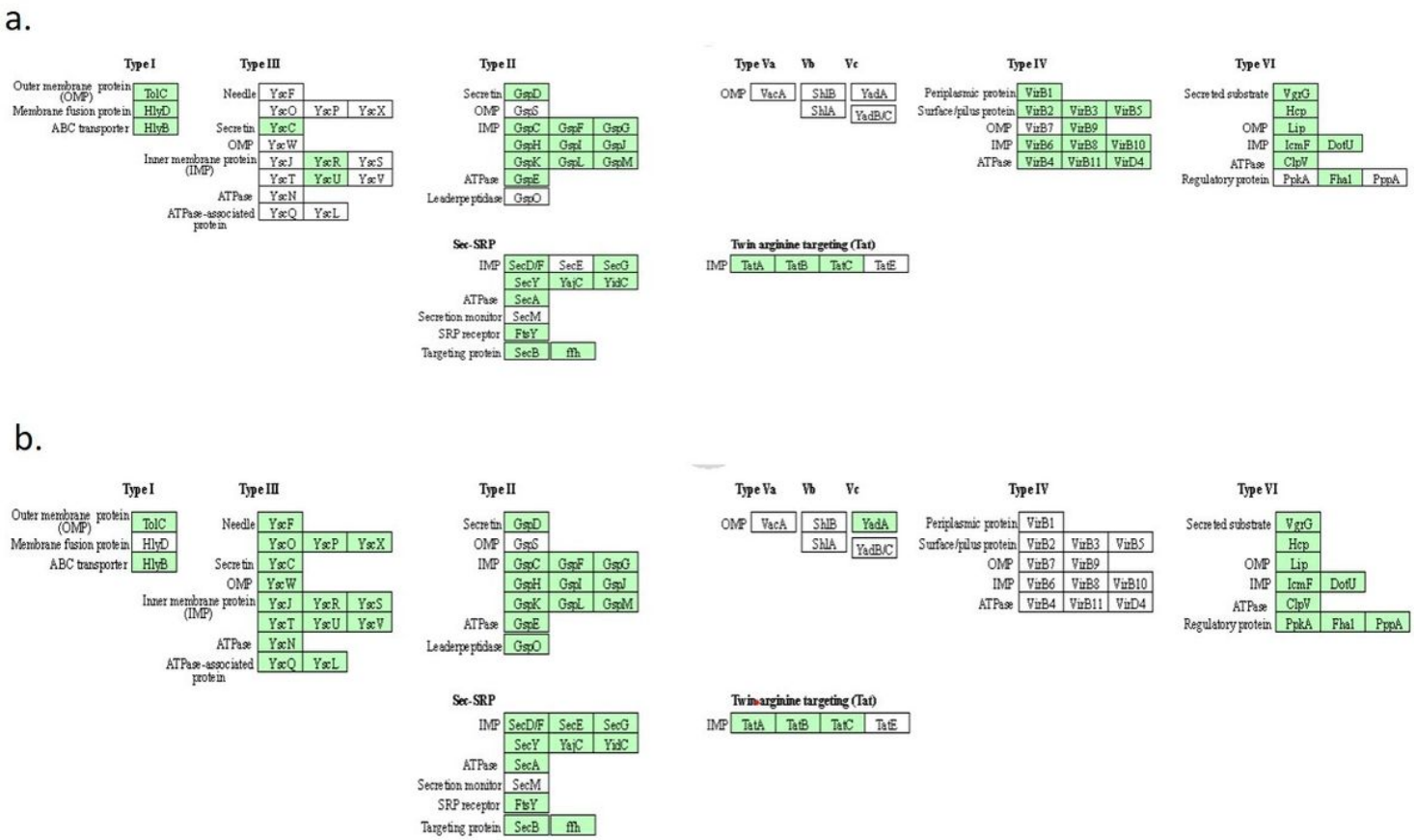

Figure 6

Pathway analysis revealing the presence of genes involved in secretion system using KEGG Mapper Reconstruct Tool in **(a)** *Burkholderia cepacia* RTE1 and **(b)** *Pseudomonas aeruginosa* RTE4. The genes in green boxes indicate the genes found in strains RTE1 and RTE4 as compared to the reference pathway in the database.

Supplementary Files

This is a list of supplementary files associated with this preprint. Click to download.

- Supplementaryfiles.docx