Combustion and Performance Analysis of a Dual-fuel Diesel Engine Using Producer Gas

Pradipta Kumar Dash
Siksha O Anusandhan University Institute of Technical Education and Research

Shakti Prakash Jena (shaktiprakash.mech@gmail.com)
Siksha O Anusandhan University Institute of Technical Education and Research

Harish Chandra Das
NIT Meghalaya: National Institute of Technology Meghalaya

Research

Keywords: Performance, Combustion, Gasifier, Fuel Consumption, Engine, Producer gas

Posted Date: March 2nd, 2021

DOI: https://doi.org/10.21203/rs.3.rs-255085/v1

Abstract

The researchers around the globe are trying to overcome energy crisis by developing suitable alternative energy source. In this work, combustion and performance analysis of a diesel engine was studied running in dual-fuel mode using producer gas. The experiment shows lower engine performance like brake thermal efficiency, increased brake specific fuel consumption and exhaust gas temperature in dual-fuel run as compared to diesel alone run. Combustion characteristics like cylinder pressure, mass fraction burned, mean combustion temperature and net heat release were also found to be deteriorated in presence of producer gas. The peak value of cylinder pressure and net heat release were noticed slightly away from the top dead center. The experimentation indicates that combustion improving techniques should be employed to enhance the performance of the dual-fuel engine to run with producer gas.

1. Introduction

Energy is the major requirement for any nation to maintain or enhance its growth rate. Diesel engines are mostly preferred as a source of power in different sectors. The emissions from the diesel engine have a very noticeable influence on the eco-system [1]. The accelerated depletion of fossil fuels knocking at the door as a global problem pursuing attention of the researchers to experiment on the use of alternative gaseous fuels [2]. Alternate gaseous fuels can be used in diesel engines with minor modifications to run them in dual-fuel mode. Producer gas (PG) is an ignitable gas produced by blowing a combination of steam and air upwards through a bed of hot coke or coal, with the end goal that the fuel is totally gasified. Fractional burning of biomass in the gasifier creates PG that can be utilized as partial substitution of diesel in compression ignition (CI) engine. Biomass is accessible in different types of backwoods build ups for example, branches, wood, rice husk, straw, coconut shell, cow excrement, wood chips, and saw residue [3]. Numerous scientists are yet focusing on the further study of diesel engines in both combustion and performance improvement by running it in dual-fuel mode. Nayak et al. experimented with dual-fuel engine running with PG and diesel. They observed a decrease in engine performance in dual-fuel run while achieved a maximum diesel saving of 83% [4]. Nayak et al. also studied the performance of a dual-fuel engine using PG and blends of neat Karanja oil with diesel. They found a decrease in brake thermal efficiency (BTE) with increase in carbon monoxide (CO) and hydrocarbons (HC) [5]. Lal and Mohapatra experimented the effect of compression ratio (CR) on performance and combustion parameters of a dual-fuel engine. They observed a decrease in ignition delay with increase in CR and achieved lower fuel consumption at CR 18 [6]. Carlucci et al. experimented on improvement of combustion in a dual-fuel engine running with PG and biodiesel with variation in injection duration and pressure. They noticed an improvement in combustion parameter with reduction in CO and HC emissions by advancing injection timing [7]. Yaliwal et al. Studied the effect of injection timing (IT), injection pressure (IP) and CR on combustion of dual fuel engine running with PG and biodiesel. They concluded that, IT at 270 before top dead centre (TDC), IP at 23 MPa, and 17.5 CR gave the best result for the dual fuel engine [8]. The present article focuses on the use of PG in a dual-fuel engine to examine its combustion and performance characteristics at optimized substitution of PG.

2. Experimental Setup And Methodology

The Fig. 1 illustrates the block diagram of the experimental engine test rig. The engine selected in this experiment is a twin cylinder, 4-stroke, 14hp diesel engine with compression ratio 16.5:1. The coupling of the engine was done with a 3-phase, 415 volt AC alternator for loading purpose. A downdraft gasifier was used to supply PG, where small piece of Eucalyptus wood with moisture content 10.2% under dry basis is used as feedstock. The contents in PG collected from the gasifier was checked by a Gas Chromatograph-2010 (CIC, Baroda), associated with a thermal conductivity detector. The composition and calorific value of PG is showed in Table 1. The calorific value of diesel used was 42 MJ kg^{-1}. An orifice meter and a water manometer are fitted to a gas surge tank to determine the supplied stream rate of producer gas. A data procuring device is attached to accumulate, store, and analyze the information. Engine combustion analyzer ECA 1.0.1was used for online combustion and performance analysis. The engine was started with diesel which runs for 15 minutes at constant 1500 rpm. In the span of heating up the engine as the exhaust gas temperature (EGT) attains a steady state respective to the operated engine loading, the desired readings are noted out three times and the mean value was taken for analysis.

Table 1
Composition and calorific value of PG.

Gas Constituents	PG, %Vol
CO	20.02
CO_2	10. 5
H_2	19.22
$C H_4$	2.75
N_2	46.5
Calorific value, MJ Nm^{-3}	5.64

3. Results And Discussion

The change in performance parameters like brake specific fuel consumption (BSFC), BTE, EGT, combustion parameters such as cylinder pressure (CP), mass fraction burned (MFB), net heat release (NHR), and mean combustion temperature (MCT) with reference to crank angle (CA), and HC, smoke opacity and nitric oxide (NO) emissions were studied for the dual-fuel engine operated with PG at optimized flow rate of 21.4 kg h^{-1}.

3.1. Performance parameters

The change in BSFC with respect to engine loading is presented in Fig. 2a. The BSFC was found to be higher in diesel + PG run as compared to diesel operation. At part load operation the marginal difference between diesel and diesel + PG mode run was quite high, while at higher engine loads the difference seems to decrease drastically. It is caused by the moderately poor calorific value of the producer gas than that of diesel that necessitates higher amount of fuel consumption, while at higher load due to injection of more pilot fuel the combustion temperature increases leading to effective utilization of the supplied fuel. Figure 2b illustrates the change in EGT in conjunction with engine load. It was quite relevant that EGT increases linearly with respect to engine load. Due to poor combustion characteristics and slow flame velocity of producer gas, the EGT was detected to be quite higher in dual-fuel run [4]. The EGT for diesel engine at full load was recorded to be 300°C in diesel alone run and in case of dual-fuel operation it was noted to be 360°C. Figure 2c shows the variation in BTE with respect to engine loading. BTE increases linearly with engine load in both mode of engine operation. But the BTE reduces by 7.5% in dual-fuel run comparison to standard diesel run caused by the inadequate combustion of PG, reduced volumetric efficiency. The carbon dioxide concentration in the producer gas affects the combustion trend and enhances the ignition lag phase. The BTE for diesel and diesel + producer gas at maximum load was found to be 24.51% and 22.66% respectively.

3.2. Combustion parameters

The variation in MFB with respect to crank angle was showed in Fig. 3a. The curve indicates that a delayed combustion was noticed for diesel + PG operation, where the CA50 (crank angle at which 50% of the supplied fuel burned) value was recorded at 10° after TDC. While in case of diesel alone run the CA50 value was recorded at 7° after TDC. As CA50 value moves away from TDC for dual-fuel run, leading to drop in specific power output from the engine. It indicates the poor burning tendency of PG, hence in diesel alone operation MFB reached 100% at 32° after TDC, while for diesel + PG the same was recorded at 40° after TDC. Figure 3b illustrates the alteration in CP with reference to engine CA. A sharp rise in the left limb of the CP curve occurred near the TDC, while the maximum value of CP for diesel run was found to be 6.12 MPa at 9° after TDC and 6.46 MPa for diesel + PG operation at 15° after TDC. A delayed combustion was observed for dual-fuel operation with peak of the curve moving away from the TDC. This can be referred to the poor combustion nature of PG that increased the combustion lag. This affects the effective power output from the engine during dual-fuel run, leading to increased fuel consumption for the unit power output. Figure 3c represents the change in NHR with respect to CA. Initially a negative value of NHR was noticed for both mode of engine operation. This can be referred to the heat absorption by the injected fuel for vaporization leads to a negative value of NHR. After start of combustion a sharp rise in NHR was noticed, where the peak value of NHR of diesel alone run was recorded to be 53.23 J deg^{-1} appeared at 1° after TDC and in case of diesel + PG the peak of NHR recorded to be 50.26 J deg^{-1} at 8° after TDC. It was found that after the second peak of NHR, a comparatively higher NHR was recorded for dual-fuel run. This indicates more fuel burns in afterburning stage for dual-fuel operation leading to higher EGT as observed for diesel + PG operation. The variation in MCT with respect to CA was showed in Fig. 3d. When the piston moving towards TDC in compression stroke a sudden rise in MCT curve was noticed 5° before TDC. The highest value of MCT reached for diesel alone run was noted to be 1427.5° C

at 30° after TDC. While for diesel + PG the peak value of MCT was found to be 1396°C appeared at 40° after TDC. This indicates a delayed rise in MCT for dual-fuel operation with PG and comparatively lower value of MCT was observed throughout the combustion cycle. The higher activation energy requirement of PG for self ignition takes away heat from the combustion chamber leading to lower MCT during dual-fuel operation. The combustion analysis indicates that, in diesel + PG operation the peak value of CP, NHR and MCT slightly moved away from TDC with respect to trend of standard diesel run. This can be referred to the slow burning characteristics of PG results in increased delay period affecting the energy release trend in the combustion chamber of the dual-fuel engine.

3.3. Emission parameters

The variation in HC emission with change in engine loading was illustrated in Fig. 4a. A decreasing trend of HC emission was noticed for both mode of operation with increase in engine load. At part load operations, higher HC emissions were noticed for diesel + PG run in comparison to diesel and the difference gradually decreases with increase in engine loading. Presence of PG in the suction volume have increased the ignition delay and slow burning tendency of PG leads to incomplete combustion of the supplied fuel causing in elevated HC emissions. While with increasing engine load the increase in amount of pilot fuel (diesel) that increases the ignition points in the combustion chamber. As a result, the increased combustion temperature helps in reaching the activation energy of the inducted fuel, leading to decrease in HC emission. At maximum loading, HC emission rose by 55% for dual-fuel mode than that of diesel run. Figure 4b represents the variation in smoke opacity with engine loading. The presence of aromatic compound in the fuel leads in smoke formation during combustion. A drop in smoke opacity was observed for diesel + PG run as compared to diesel alone. The replacement of diesel energy share by PG supply reduced the presence of aromatic compound in combustion zone, resulting in reduced smoke opacity. At full load operation 23.7% drop in smoke opacity was noticed for dual-fuel mode than that of diesel run. The variation in NO emission with change in engine load was showed in Fig. 4c. As the engine load was increased an increase in NO emissions were observed for both mode of operation, with a prominent rise in NO curve for diesel alone run was noticed. The reason behind this could be the drop in MCT with induction of PG that minimizes the formation of NO. Again replacement of swept volume of inhaled air to the suction stroke due to induction of PG also adds to the cause for reduction in NO emissions. Diesel + PG run showed 72% lower NO emissions than diesel run at full engine load.

4. Conclusions

The following findings are extracted from the experimentation:

- It was found that BTE linearly climbed up with hike in engine loading, while for diesel + PG operation showed 7.5% lower BTE than that of diesel alone run at 100% engine load operation.
- EGT is also found to be very high for diesel + PG due to poor combustion characteristics and low flame velocity of PG, as a result higher content of fuel energy lost through the exhaust.

- BSFC increased in dual-fuel run as compared to standard diesel alone run because of the lower heating value of PG needing higher fuel consumption.
- The trend of combustion characteristics (CP, MFB, NHR, and MCT) indicates that presence of PG in inducted air have affected the combustion trend of the diesel engine, leading to increased fuel consumption for unit power output.
- NO and smoke opacity were reduced for diesel + PG operation by 72 and 23.7% respectively at full load operation, while a rise in HC emission by 55% was observed as compared to diesel un.

As producer gas is a renewable energy and it helps in saving the conventional fuels, it can be used to meet the energy demands for small scale power generation and addition of fuel additives to the pilot fuel for improving the combustion of producer gas is needed to increase the BTE of dual-fuel operation.

Declarations

Availability of data and materials

The datasets during and/or analysed during the current study available from the corresponding author on reasonable request.

Competing interests

The authors declare that they have no known competing financial interests or personal relationships that could have appeared to influence the work reported in this paper.

Funding

No funding has been received from any source for this research work.

Authors' contributions

Harish Chandra Das: Conceptualization

Shakti Prakash Jena: Methodology, Data curation, Writing-Original draft preparation, visualization, investigation

Pradipta Kumar Dash: Writing-Reviewing and Editing

Acknowledgements

Not Applicable

References

1. Jena SP, Mahapatra S, Acharya SK. Optimization of performance and emission characteristics of a diesel engine fuelled with Karanja biodiesel using Grey-Taguchi method. Materials Today: Proceedings 2020; https://doi.org/10.1016/j.matpr.2020.08.579.
2. Jena SP, Acharya SK. Thermodynamic analysis of a thermal barrier-coated CI engine in a dual-fuel mode using biogas. Int. J of Ambi. Energy 2020;doi: 10.1080/01430750.2020.1722223.
3. Ramadhas AS, Jayaraj S, Muraleedharan C. Dual fuel mode operation in diesel engines using renewable fuels: Rubber seed oil and coir-pith producer gas. Renewable Energy 2008; 33: 2077–2083.
4. Nayak C, Acharya SK, Swain RK. Performance of a twin cylinder diesel engine in dual fuel mode using woody biomass producer gas. Int. J of Sustain Engg 2015; 8: 341–348.
5. Nayak C, Acharya SK, Swain RK. Performance of a twin cylinder dual-fuel diesel engine using blends of neat Karanja oil and producer gas. Int. J of Ambi. Energy 2016; 37: 36–45.
6. Lal S, Mohapatra SK. The effect of compression ratio on the performance and emission characteristics of a dual fuel diesel engine using biomass derived producer gas. Appl. Therm. Engg 2017; http://dx.doi.org/10.1016/j.appltermaleng.2017.03.038.
7. Carlucci AP, Ficarella A, Laforgia D, Strafella L. Improvement of dual-fuel biodiesel-producer gas engine performance acting on biodiesel injection parameters and strategy. Fuel 2017; http://dx.doi.org/10/1016/j.fuel.2017.07.100.
8. Yaliwal VS, Banapurmath NR, Gaitonde VN, Malipatil MD. Simultaneous optimization of multiple operating engine parameters of a biodiesel-producer gas operated compression ignition engine coupled with hydrogen using response surface methodology. Renew Energ 2019; 139: 944–959.

Figures

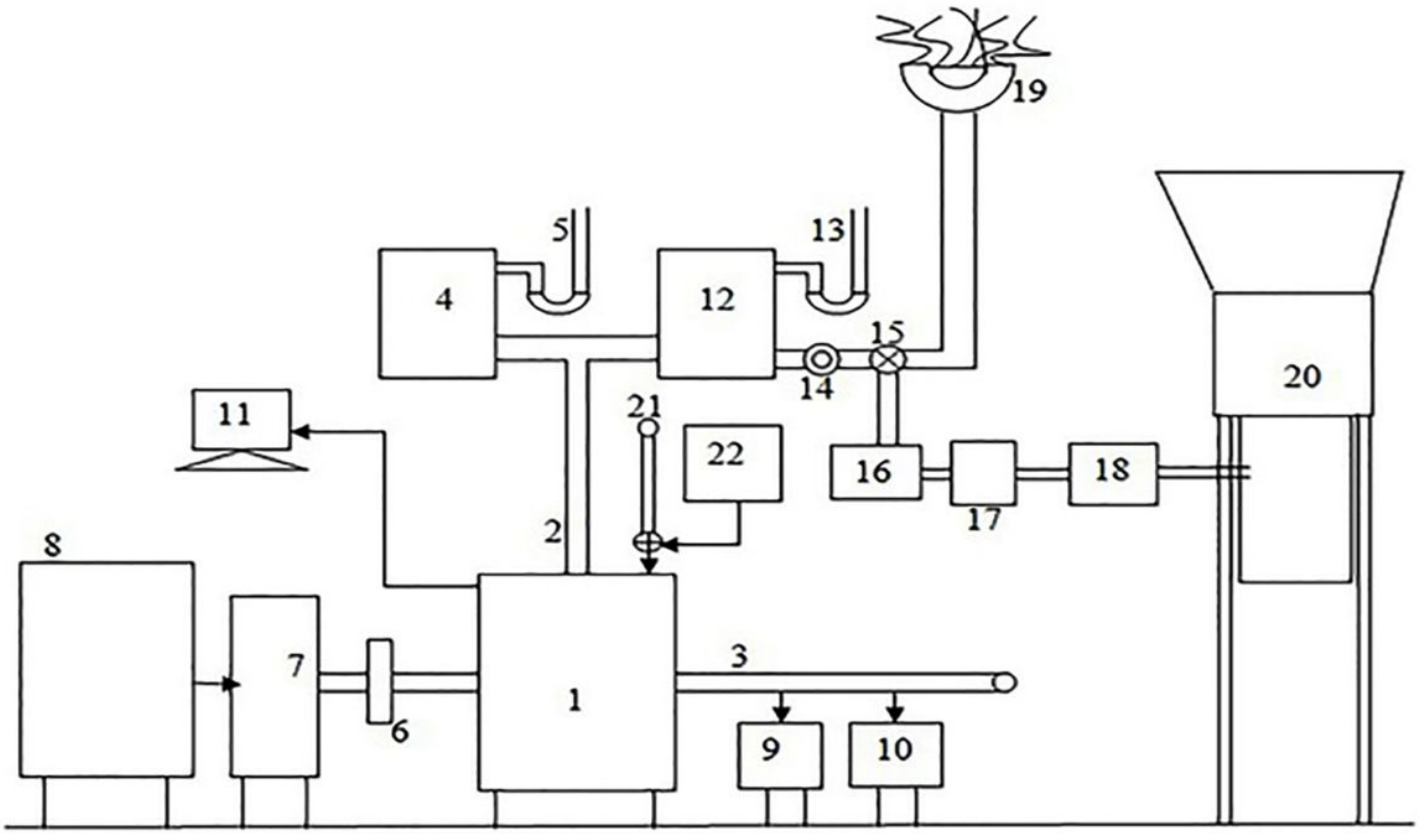

1. Engine 9. Multi gas analyser 16. Fine filter
2. Inlet manifold 10. Smoke meter 17. Passive filter
3. Exhaust manifold 11. DAD 18. Cooling unit
4. Air box 12. Gas surge tank 19. Burner
5. Manometer 13. Manometer 20. Gasifier unit
6. Coupling 14. Orifice meter 21. Burette
7. Alternator 15. Flow control valve 22. Fuel tank
8. Electrical resistance loading unit

Figure 1

Block diagram of engine setup.

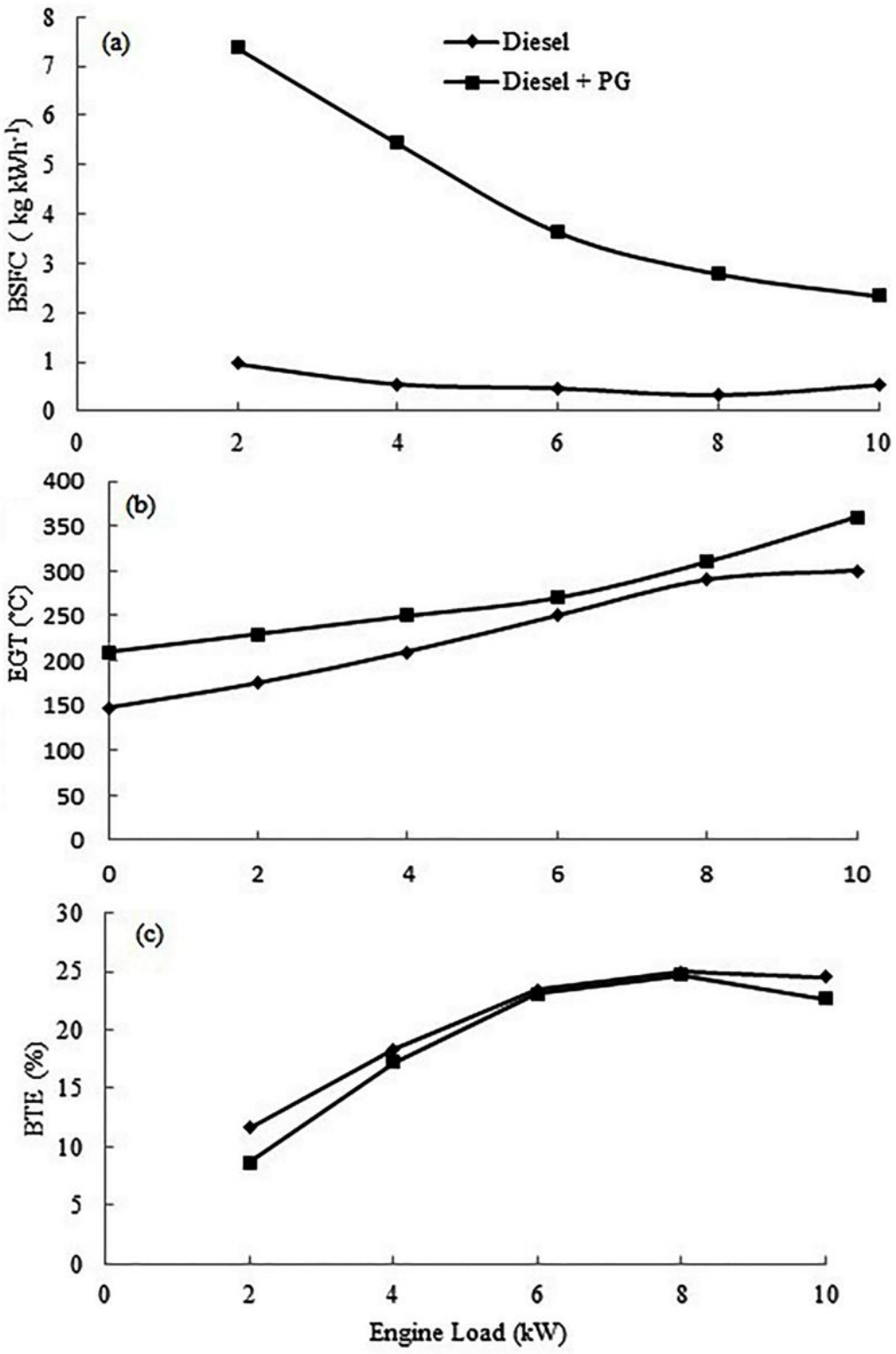

Figure 2

Change in performance parameters with respect to engine loading (a) BSFC; (b) EGT; (c) BTE.

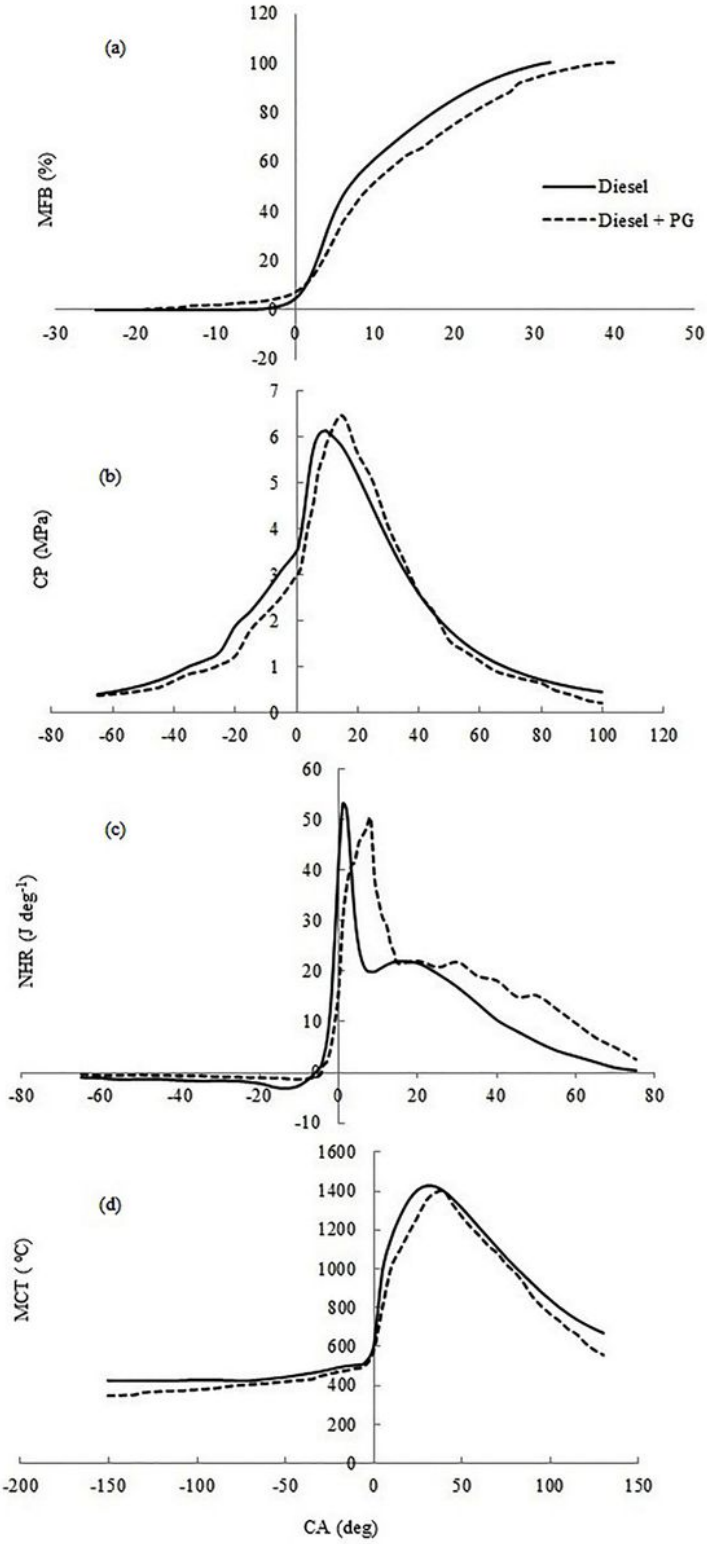

Figure 3

Change in combustion parameters with respect to CA (a) MFB; (b) CP; (c) NHR; (d) MCT.

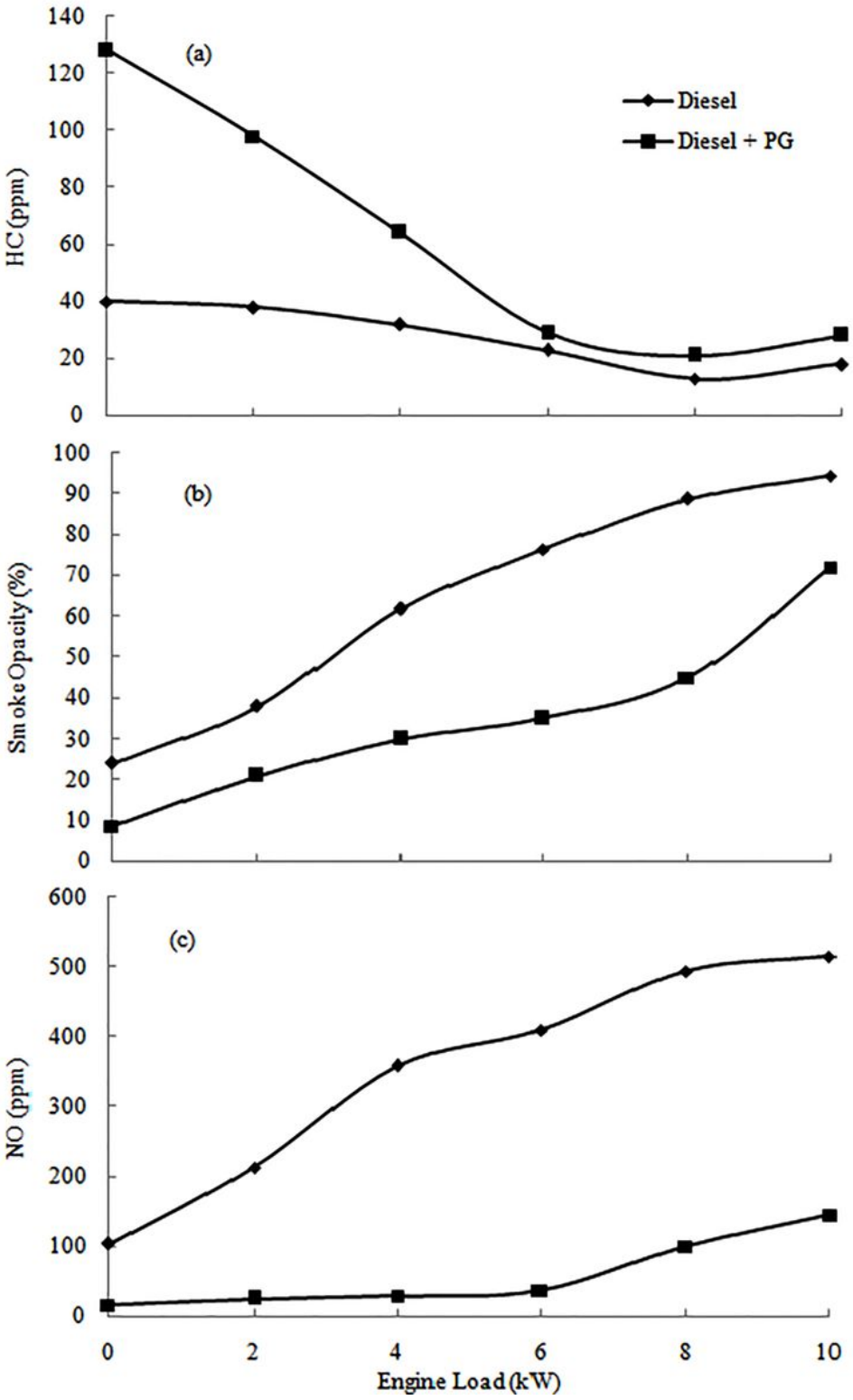

Figure 4

Change in emission parameters with respect to engine loading (a) HC; (b) Smoke opacity; (c) NO.