Screening Risk Factors and Interaction Analysis of Hypertension in Overweight and Obesity Population based on Three Statistical Models

Li Lu Wei (1055517208@qq.com)

Guilin Medical University Affiliated Hospital https://orcid.org/0000-0002-1439-6160

Yu jian

Guilin Medical University

Research article

Keywords: Overweight and obese, Physical examination population, Hypertension, Classification tree model, Logistic regression model, BP Neural network model, ROC curve.

Posted Date: April 6th, 2021

DOI: https://doi.org/10.21203/rs.3.rs-390569/v1

Abstract

Background Hypertension is a common chronic disease in the world, and it is also a common basic disease of cardiovascular and brain complications. Overweight and obesity are the high risk factors of hypertension. In this study, three statistical methods, classification tree model, logistic regression model and BP neural network, were used to screen the risk factors of hypertension in overweight and obese population, and the interaction of risk factors was conducted Analysis, for the early detection of hypertension, early diagnosis and treatment, reduce the risk of hypertension complications, have a certain clinical significance.

Methods The classification tree model, logistic regression model and BP neural network model were used to screen the risk factors of hypertension in overweight and obese people.The specificity, sensitivity and accuracy of the three models were evaluated by receiver operating characteristic curve (ROC). Finally, the classification tree CRT model was used to screen the related risk factors of overweight and obesity hypertension, and the non conditional logistic regression multiplication model was used to quantitatively analyze the interaction.

Results The Youden index of ROC curve of classification tree model, logistic regression model and BP neural network model were 39.20%,37.02% ,34.85%, the sensitivity was 61.63%, 76.59%, 82.85%, the specificity was 77.58%, 60.44%, 52.00%, and the area under curve (AUC) was 0.721, 0.734,0.733, respectively. There was no significant difference in AUC between the three models (P>0.05). Classification tree CRT model and logistic regression multiplication model suggested that the interaction between NAFLD and FPG was closely related to the prevalence of overweight and obese hypertension.

Conclusion NAFLD,FPG,age,TG,UA, LDL-C were the risk factors of hypertension in overweight and obese people. The interaction between NAFLD and FPG increased the risk of hypertension.

Background

Hypertension is a common chronic disease in the world, as well as a common basic disease of cardiovascular and brain complications. According to China's hypertension prevention and control guidelines[1], the newly diagnosed hypertension population in China shows an increasing trend. According to the latest blue book survey, it is predicted that the prevalence rate of hypertension in China will reach 31.89% in 2019, and the number will reach 358 million. Overweight and obesity are high risk factors for hypertension[2]. With the gradual increase of body mass index, the risk of hypertension in overweight and obese people is 1.16–1.28 times higher than that of normal weight people[3]. The cross-sectional study of 240000 people in China [4] shows that the risk of hypertension among overweight people is 3–4 times higher than that of normal weight people. More than 90% of obese people suffer from hypertension and disorder of glucose and lipid metabolism, which eventually leads to adverse prognostic events such as cardiovascular and cerebrovascular diseases.

At present, in addition to the traditional data mining technology logistics regression model, neural network[5] and classification tree [6] have also been widely used in the medical field in recent years, and have high predictive value. Previous studies only used one or two models for analysis, unable to carry out comparative analysis between models. Therefore, this study uses classification tree model, L Logistic regression model and BP neural network are three statistical methods to screen the risk factors of hypertension in overweight and obese population, and analyze the interaction of risk factors. It has certain clinical significance for taking measures to early detect and diagnose hypertension and reduce the risk of hypertension complications.

Methods

research object

A cross-sectional study was conducted in the physical examination department of Affiliated Hospital of Guilin Medical College from August to November 2019. All the subjects were informed and agreed. The study was approved by the ethics committee of Guilin Medical College. Among them, 3150 subjects with complete data were included in the study, excluding those younger than 18 years old, pregnant women, patients with major diseases such as malignant tumor and severe liver and kidney dysfunction. The age range of the subjects ranged from 18 to 85 years old, with an average age of (46.33±11.7) years. There were 2106 males (66.8%) and 1044 females (33.2%) with an average age of (48.18±11.23) years. There were 1277 overweight and obese people with hypertension (case group), with an average age of (50.55±11.19) years old. There were 909 males (71.1%) and 368 females (28.9%). There were 1873 overweight and obese people without hypertension (control group), with an average age of (43.46±11.15) years old, 1197 men (63.9%) and 676 women (36.1%).

data collection

During the physical examination, the subjects collected basic information, including age, nationality, marital status; past history: nonalcoholic fatty liver disease (NAFLD), malignant tumor, severe liver and kidney function damage, etc. Related medication history, personal history and family history.

physical measurement and measurement method

The height and weight of the subjects were measured with a calibrated height and weight meter (Shenzhen, China). The subjects were removed their shoes and caps, their heels were close together, and their back was close to the height and weight measuring rod. The height measurement accuracy was 0.1cm and the weight measurement accuracy was 0.1kg. Body mass index (BMI) was calculated. BMI = weight (kg)/height (M2). The researchers should avoid drinking, smoking, tea and coffee, avoid strenuous exercise, and take a quiet rest for 5-10 minutes. They should take a sitting position. The blood pressure of the right upper arm in the sitting position should be measured with the accuracy of 1mmhg (1mmhg = 0.133 kPa).

laboratory inspection and measurement methods

All the subjects were fasted for at least 10 hours. A light diet was taken the day before the examination. Blood samples (5ml) from the elbow vein were collected on an empty stomach in the morning of the examination day. Biochemical indexes: FPG,UA,TG,TC,LDL-c,HDL-c,Cr and BUN were detected by Cobas C501 automatic biochemical analyzer of Roche company. All subjects were examined by fixed ultrasound specialist.

diagnostic criteria

The diagnostic criteria of hypertension were defined according to the Chinese guidelines for prevention and treatment of hypertension (2018 Revision)[1] as systolic blood pressure≥140mmHg and/or diastolic blood pressure≥90mmHg, SBP≥140mmHg and DBP< 90mmHg. The diagnostic criteria of dyslipidemia refer to the standard of Chinese adult dyslipidemia prevention and treatment guidelines revised in 2016 [7]: TC ≥ 6.2mmol/l; TG ≥ 2.3mmol/l; LDL-c ≥ 4.1mmol/l; HDL-c < 1.0mmol/l, and any of the above is diagnosed as dyslipidemia. According to the Chinese guidelines for the prevention and treatment of type 2 diabetes mellitus (2017 edition)[8], the diagnostic criteria for abnormal blood glucose were defined as FPG ≥ 6.1mmol/l. According to the "guidelines for diagnosis and treatment of nonalcoholic fatty liver disease (updated in 2018)[9], NAFLD work definition is: Patients with color Doppler ultrasound and CT imaging findings are similar to alcoholic liver disease, but have no history of excessive drinking and other causes of alcoholic liver disease. According to the consensus of Chinese adult obesity prevention experts[10], overweight and obese people are defined as BMI ≥ 24kg/m^2. According to the consensus of Chinese experts on hyperuricemia and gout treatment[11], hyperuricemia is defined as: uric acid >420μmol/L (male), uric acid >360μmol/L (female). In this study, fasting blood bun ≥7.1mmol/l was defined as hyperbunemia, and fasting blood CR level: male ≥106μmol/L, female ≥97μmol/L was defined as hyperchromemia.

statistical treatment

All the data were analyzed by spss24.0 software and medcalc (version 19.1) software. The measurement data in accordance with normal distribution were expressed as mean±standard deviation. The significance of difference between groups was compared by t-test, the count data was expressed by percentage. The comparison of counting data between groups was performed by chi square test. At the same time, the classification tree model, logistic regression model and BP neural network model were established to explore the risk factors and interaction of hypertension in overweight and obese people. The difference was statistically significant ($P < 0.05$). Receiver operating characteristic curve (ROC) was used to evaluate the specificity, sensitivity and accuracy of the three model. The related influencing factors of overweight and obesity hypertension screened by classification tree model CRT method were used to verify the two most likely interaction factors in logistic regression multiplication model, and the disease risk was expressed by (odds ratio, *OR*). If $P < 0.05$, there was multiplicative interaction between them, otherwise, there was No.

Results

Comparison of clinical and metabolic characteristics between case group and control group

Compared with the control group, the age, FPG,UA,TG, TC, LDL-c, BUN and Cr levels in the case group were increased, while the HDL-c level was decreased ($P < 0.001$). NAFLD in the case group was 573 (44.9%) and that in the control group was 378 (20.2%). The difference was statistically significant ($\chi2 = 219.609$, $P < 0.001$), as shown in Table 1.

Table 1
Comparison of clinical and metabolic characteristics between case group and control group($\bar{x}\pm s$,%)

variable	Case group (1277 cases)	Control group (1277 cases)	t/χ^2 value	*P* value
Age (years)	50.55 ± 11.19	43.46 ± 11.16	17.479	0.000
UA (umol/L)	403.1 ± 95.50	364.92 ± 87.42	11.402	0.000
BUN(mmol/L)	4.72 ± 1.26	4.53 ± 1.19	4.398	0.000
Cr (umol/L)	82.42 ± 19.05	77.82 ± 16.50	7.019	0.000
TG (mmol/L)	2.16 ± 1.44	1.64 ± 1.13	10.840	0.000
TC (mmol/L)	4.96 ± 0.83	4.6 ± 0.80	10.427	0.000
LDL-c (mmol/L)	3.35 ± 0.80	3.1 ± 0.76	7.724	0.000
HDL-c (mmol/L)	1.17 ± 0.31	1.2 ± 0.29	-4.410	0.000
FPG (mmol/L)	5.82 ± 1.44	5.3 ± 0.93	10.646	0.000
NAFLD(cases)(%)	573(44.9)	378(20.2)	219.609	0.000

Note: UA: uric acid; bun: urea nitrogen; Cr: creatinine; TG: triglyceride; TC: total cholesterol; LDL-C: low-density lipoprotein cholesterol; HDL-C: high-density lipoprotein cholesterol; FPG: fasting blood glucose; NAFLD: nonalcoholic fatty liverdisease.

Building Classification Tree Model

Using CRT classification tree method to construct hypertension model of overweight and obese physical examination population, the overweight and obese hypertension patients were assigned as 1, and the overweight and obese people without hypertension were assigned as 0.Taking gender,age,UA,TC,TG,HDL-c,LDL-c,BUN,Cr,FPG,NAFLD as independent variables, overweight and obesity hypertension as dependent variables, a classification tree model was established by CRT method to screen the risk factors. After pruning the tree to avoid over fitting, the classification tree model includes 5 layers, 17 nodes and 9 Final nodes. Classification tree model showed that NAFLD, FPG, age, TG, UA and LDL-c were risk factors for overweight and obese hypertension, as shown in Fig. 1.

Logistic Regression Model

Before the logistic regression analysis, in order to make the data closer to clinical application, we inquired the critical value of the latest medical guidelines of each specialty in each influencing factor, and divided them into two groups according to the critical value as the standard. The value above the critical value of pathological significance of continuous variables was assigned as 1, and the value below the critical value was 0. The age cut-off value was 51.5 years old, greater than 51, 5-year-old was assigned as 1, less than or equal to 51.5-year-old was assigned as 0, as shown in Table 2. Single factor Logistic regression model was constructed by taking overweight and obesity hypertension as dependent variables and influencing factors as independent variables.The results showed that NAFLD,FPG,age,TG,TC,LDL-c,UA,Cr and gender (male) were risk factors for overweight and obese hypertension, and high HDL-c was for overweight and obese hypertension The protective factor of pressure ($P < 0.01$). After controlling the confounding factors, the results showed that NAFLD,FPG,age,TG,LDL-c,UA,Cr were the risk factors of overweight and obese hypertension ($P < 0.05$ or $P < 0.01$), as shown in Table 3.

Table 2
main variables and assignment of influencing factors of overweight and obesity hypertension

variable	assignment
overweight and obesity hypertension	No = 0,Yes = 1
Age (years)	≤ 51.5 = 0,▯51.5 = 1
Gender	Male = 0,Female = 1
NAFLD	No = 0,Yes = 1
UA(μmol/L)	Female: <360 = 0;≥360 = 1
	Male: <420 = 0;≥420 = 1
FPG(mmol /L)	<6.1 = 0;≥6.1 = 2
TG(mmol /L)	<2.26 = 0;≥2.26 = 1
TC(mmol/L)	<6.22 = 0;≥6.22 = 1
LDL-c (mmol/L)	<4.14 = 0;≥4.14 = 1
HDL-c (mmol/L)	<1.04 = 0;≥1.04 = 1
High BUN(mmol/L)	<7.1 = 0;≥7.1 = 1
High Cr(μmol/L)	Female: <97 = 0;≥97 = 1
	Male: <106 = 0;≥106 = 1

Table 3
The results of univariate and multivariate logistic regression analysis on the influencing factors of overweight and obesity hypertension and the results of logistic regression multiplication analysis of interactive influencing factors

		Single factor analysis	*P* value	Multivariate analysis	*P* value
		OR value(*95%CI*)		*OR* value(*95%CI*)	
Female	-	1		1	
	+	1.395(1.196−1.626)	0.000	1.120(0.939−1.336)	0.208
TG	-	1	0.000	1	0.002
	+	2.140(1.816−2.523)		1.376(1.125−1.684)	
TC	-	1	0.000	1	0.378
	+	2.023(1.447−2.827)		1.212(0.791−1.858)	
LDL-c	-	1	0.000	1	0.016
	+	1.831(1.468−2.284)		1.414(1.066−1.876)	
HDL-c	-	1	0.000	1	0.798
	+	0.718(0.616−0.836)		1.025(0.850−1.235)	
UA	-	1	0.000	1	0.000
	+	1.999(1.725−2.317)		1.540(1.305−1.817)	
Cr	-	1	0.000	1	0.003
	+	2.512(1.807−3.492)		1.725(1.203−2.275)	
BUN	-	1	1.455	1	0.735
	+	1.455(0.975−2.172)		0.925(0.588−1.455)	
Age (years)	≤ 51.5	1		1	
	> 51.5	2.968(2.553−3.451)	0.000	2.575(2.190−3.029)	0.000
NAFLD	-	1	0.000	1	0.000
	+	3.219(2.749−3.769)		2.489(2.095−2.958)	
FPG	-	1	0.000	1	0.000
	+	3.162(2.562−3.902)		2.103(1.679−2.635)	

Note: UA: uric acid; bun: urea nitrogen; Cr: creatinine; TG: triglyceride; TC: total cholesterol; LDL-C: low-density lipoprotein cholesterol; HDL-C: high-density lipoprotein cholesterol; FPG: fasting blood glucose; NAFLD: nonalcoholic fatty liverdisease.

		Single factor analysis	*P* value	Multivariate analysis	*P* value
		OR value(*95%CI*)		*OR* value(*95%CI*)	
NAFLD	FPG				
-	-	1.000	0.000	1.000	0.000
+	-	3.219(2.749–3.769)	0.000	2.489(2.095–2.958)	0.000
-	+	3.162(2.562–3.902)	0.000	2.103(1.679–2.635)	0.000
+	+	4.452(3.330–5.950)	0.000	3.023(2.225–4.106)	0.000

Note: UA: uric acid; bun: urea nitrogen; Cr: creatinine; TG: triglyceride; TC: total cholesterol; LDL-C: low-density lipoprotein cholesterol; HDL-C: high-density lipoprotein cholesterol; FPG: fasting blood glucose; NAFLD: nonalcoholic fatty liverdisease.

Bp Neural Network Model

BP neural network was used to construct the hypertension model of overweight and obesity population. 11 research variables were assigned and included into the neural network model to form the input neuron. Whether or not suffering from overweight and obesity hypertension was taken as the output neuron to construct the standardized BP model. Its structure is: input layer (22 neurons), 1 hidden layer (7 neurons), and output layer (2 neurons). The importance of each dependent variable to the model was normalized as shown in Fig. 2, NAFLD > FPG > age > CR > TG > UA > BUN > LDL-c > gender > TC > HDL-c, as shown in Fig. 2.

Comparison Of Screening Effects Of Three Models

According to the predictive variables obtained from the three models as test variables, the ROC curve was drawn with overweight and obesity hypertension as state variables. The Youden index, sensitivity, specificity and area under curve (AUC) were 39.20%,61.63%,77.58% and 0.721, respectively. The Youden index, sensitivity, specificity and AUC of logistic regression model were 37.02%,76.59%,60.44% and 0.734, respectively. The Youden index of ROC curve of BP neural network model was 34.85%, sensitivity was 82.85%, specificity was 52.00%, AUC value was 0.733. There was no significant difference in pairwise comparison between the three models (P > 0.05), indicating that there was no significant difference between the three models, see Fig. 3, Table 4,Table 5.

Table 4
Comparison of screening parameters of logistic regression model, classification tree model and BP neural network model

parameter	Logistic regression model	Classification tree model	BP Neural network model
Susceptibility %	76.59	61.63	82.85
Specificity %	60.44	77.58	52.00
AUC %	0.734	0.721	0.733
Youden index %	37.02	39.20	34.85

Table 5
pairwise comparison of logistic regression model, classification tree model and BP neural network model

parameter	Logistic regression model and classification tree model	Classification tree model and BP neural network model	BP neural network model and logistic regression model
Differences between areas	0.0131	0.0117	0.00140
95% confidence interval	-0.0112-0.0375	-0.0126-0.0360	-0.00333-0.00612
Z statistics	1.056	0.944	0.580
P	0.2911	0.3451	0.5616

Logistic Regression Multiplication Model

Classification tree model CRT showed that the interaction between NAFLD and FPG and age was closely related to overweight and obese hypertension. Through the verification in logistic regression, (odds ratio, *OR*)was used to represent the disease risk, $P < 0.05$, indicating that there was a multiplicative interaction between NAFLD and FPG, as shown in Table 3.

Discussion

Logistic regression model[12] is a multivariable analysis method of probabilistic nonlinear regression, which is suitable for binary data. In this study, single factor analysis was conducted first, and then the confounding factors were controlled. After controlling the confounding factors, NAFLD, FPG, age, TG, LDL-c, UA and Cr were the risk factors of hypertension in overweight and obese physical examination population, which was similar to the previous related studies[13]. The results of logistic regression model directly showed the risk ratio of single risk factors. The highest risk ratio of overweight and obese people aged 51.5 years old with hypertension was 2.575 times higher than that of overweight and obese people

under 51.5 years old, and the risk of FPG ≥ 6.1 mmol/l was 2.103 times of that of FPG < 6.1 mmol/l. However, logistic regression model could not screen the two risk factors closely related to the disease, and could not show the interaction of risk factors on the disease.

Decision tree is a tree decision graph with additional probability results. It is an intuitive graph method using statistical probability analysis. When decision tree is used for classification, it is called classification tree. The results of the classification tree model are shown in the form of tree graph, which is more easy to understand. For example, the classification tree model in this study showed six risk factors of overweight and obesity hypertension, namely NAFLD, age, FPG, TG, UA,LDL-c.Even though overweight and obese, the physical examination population is rarely willing to carry out regular examination, so the classification tree results indicate the high risk factors of disease by age segmentation, which can be used as a reference for purposeful monitoring of such people. The classification tree model showed that the prevalence of hypertension in overweight and obese people aged 51.5 years was 52%, which was higher than that in the age ≤ 51.5 years (22.4%), which means that more than half of the overweight and obese people could eventually develop hypertension. Therefore, it is suggested that the regular monitoring of blood pressure in overweight and obese people with age > 51.5 years old is very important and can develop early Now hypertension and treatment. However, the classification tree model can not show the individual effect of each risk factor on the disease, nor can it quantify the multiple relationship between more than two risk factors and the disease, and can not obtain the effective ratio.

In addition, the BP neural network model is also an analysis method with high prediction value. The BP neural network model[14] does not have high requirements for the types of independent variables. Through the establishment of an artificial intelligence system of learning, memory and association patterns, it has a good recognition ability for the complex nonlinear relationship between variables, and has good stability, which can be used for logistic regression model and score Class tree models are compared with each other to get more accurate analysis results. This study shows that the sensitivity of BP neural network model is 82.85%, which shows that the prediction value of hypertension is high. Through normalizing the initial data, the convergence of the model is improved, and the results of the model are more in line with the clinical research NAFLD, FPG and age are still the top three of normalization importance, followed by Cr, TG, UA,BUN, LDL-c. Compared with logistic regression model and classification tree model, the types and importance of risk factors were not significantly different.However, BP model and neural network can not explain the reasoning process of some neural models, such as BP neural network.

The process of overweight and obese people suffering from hypertension is the result of the interaction of various risk factors. It is necessary to explore the influence of the interaction of various risk factors on the disease, but logistic regression can not screen and analyze the interaction of risk factors. It is necessary to introduce the classification tree model to screen out the possible risk factors with the greatest interaction, and then use the logistic regression multiplication model Two factors which are most likely to interact are introduced to verify and obtain the multiple coefficient. The results of classification

tree model showed that NAFLD and FPG had positive interaction. The prevalence of hypertension with NAFLD and FPG > 5.525 mmol/L was 69.7%. The logistic regression model showed that the patients with NAFLD and FPG ≥ 6.1 mmol/L were 4.452 times higher than those without NAFLD and FPG 6.1 mmol/L, suggesting that overweight and obese people with NAFLD and abnormal blood glucose have a high risk of hypertension, and blood pressure monitoring should be strengthened.

Among the three models, the specificity of the classification tree model was 77.58%, and the sensitivity of BP neural network model was 82.85%. There was no significant difference in the area under the ROC curve of the three models, indicating that there was no significant difference among the three models in this study. Therefore, we can take the advantages of each other to support each other and make the results more reliable.

In this study, the prevalence of hypertension in overweight and obese people over 51.5 years old was significantly higher than that in people under 51.5 years old, which became a risk factor for overweight and obese hypertension. It may be due to the gradual decrease of vascular endothelial elastic substances, the decrease of arterial compliance and the decrease of blood pressure regulation ability.The abnormal lipid metabolism such as NAFLD, high TG and high LDL-c is due to white blood Color adipose tissue produces a variety of cytokines, such as resistin, TFN-α, and so on, through the influence of a series of metabolic pathways, thus leading to the activation of the sympathetic nervous system, resulting in increased blood pressure[15]. For the high FPG population, it may be related to insulin resistance and hyperinsulinemia. Relevant studies have shown that insulin may lead to the increase of norepinephrine level and induce sympathetic nerve excitation, thus raising hypertension[16–17].High UA and high Cr can cause renal hypertension. According to research, the related mechanism may be related to promoting the contraction of vascular smooth cells, inflammatory reaction, oxidative stress, etc. [18, 19]

Limitations

However, there are also some defects in this study, such as the diet and exercise of the physical examination population were not consulted, and were not included in this study. The dietary pattern and dietary structure are obviously important for the occurrence of overweight and obesity hypertension. In addition, the physical examination group should be concentrated in Guilin, so there are some limitations for the application of this model.

Conclusion

To sum up, NAFLD,FPG,age,TG,UA,LDL-c were risk factors for hypertension in overweight and obese people. There was no difference in screening performance of the three models. The interaction between NAFLD and FPG increased the risk of hypertension in overweight and obese people. It is necessary to strengthen the monitoring of NAFLD patients, especially those with NAFLD and hyperglycemia, so as to take measures to detect and diagnose hypertension earlyand reduce the risk of hypertension complications.

Abbreviations

UA
uric acid; bun:urea nitrogen; Cr:creatinine; TG:triglyceride; TC:total cholesterol; LDL-C:low-density lipoprotein cholesterol; HDL-C:high-density lipoprotein cholesterol; FPG:fasting blood glucose; NAFLD:nonalcoholic fatty liverdisease;BMI:Body mass index;

Declarations

Ethics approval and consent to participate

The study was approved by the ethics committee of Guilin Medical College.Prior written informed consent was obtained from all study participants.

Consent for publication

For this type of study formal consent is not required. The article does not contain any other studies with human or animal subjects performed by the author.

Availability of data and materials

The datasets used and analysed during the current study are available from the physical examination department of Affiliated Hospital of Guilin Medical College on reasonable request.

Competing interests

Author has no conflict of interest.

Funding

this project is supported by Guilin scientific research and technology development program (20190218-5-1),The funding bodies played no role in the design of the study and collection, analysis, and interpretation of data and in writing the manuscript.

Authors’ contributions

LL□HQ□SJ□SY□LX designed the study, and drafted the manuscript. WC□YP□WL□QY have a part in study design,JRcolleced data,LL□YJ participated in data interpretation, and helped to draft the manuscript.All authors take public

responsibility for the content. All authors have read and approved the final version of the manuscript.

Acknowledgements

Not Applicable

References

1. Chinese guidelines for the prevention and treatment of hypertension. 2018 [J]. Prevention and treatment of cardiovascular and cerebrovascular diseases, 2019,19 (01): 1–44.
2. Wang Zengwu H, Guang W, Xin, et al. Prevalence of overweight / obesity and clustering analysis of cardiovascular risk factors in middle-aged population in China [J]. Chinese Journal of hypertension. 2014;22(10):1000.
3. Feng Baoyu C, Jichun L. Ying, et al. A follow-up study on the relationship between overweight and obesity and hypertension in Chinese adults [J]. Chinese Journal of epidemiology. 2016;37(05):606–11.
4. Chinese expert consensus on obesity related hypertension management. Chinese Journal of cardiovascular disease, 2016 (03): 212–219.
5. Ou Mingwang, ye Chunyang. Medical diagnosis based on neural network [J]. Journal of Hainan University (NATURAL SCIENCE EDITION). 2019;37(03):219–26.
6. Qiang Wu, Dingwei Wu, Xicheng Fu, et al. Medical data analysis based on decision tree [J]. Computer CD software application, 2014,17 (01): 128 + 130.
7. Zhu Junren, Gao runlin, Zhao h, et al. Guidelines for the prevention and treatment of dyslipidemia in Chinese adults (2016 Revision) [J]. Chinese Journal of circulation. 2016;31(10):937–53.
8. Chinese guidelines for the prevention and treatment of type 2 diabetes mellitus. (2017 Edition) [J]. Chinese Journal of practical internal medicine, 2018,38 (04): 292–344.
9. Fatty liver and alcoholic liver disease group of Hepatology branch of Chinese Medical Association, Expert Committee on fatty liver disease of Chinese Medical Association, fan. Jiangao, et al. Guidelines for prevention and treatment of nonalcoholic fatty liver disease (updated in 2018) [J]. Journal of practical liver disease, 2018,21 (02): 30–39.
10. Chinese. Journal of Endocrinology metabolism. 2011;27(09):711–7.
11. Endocrinology branch of Chinese Medical Association. Chinese expert consensus on the treatment of hyperuricemia and gout [J]. Chinese Journal of Endocrinology metabolism. 2013;29(11):913–20.
12. Li Chen Z, Yang C. Changsheng. Common problems and precautions of logistic regression application [J]. Chinese Journal of child health. 2020;28(03):358–60.
13. Zhang Fu Y, Peijing C, Yong, et al. Logistic regression analysis of obesity hypertension detection rate and its influencing factors [J]. Chinese health standard management. 2019;10(22):8–11.
14. Liu Qingyun LV, Yanhui. Application of improved BP neural network in medical treatment [. J]Journal of Shenyang University of technology. 2013;32(03):48–51.
15. Proen9a ARG. SertiéRAL. Oliveira AC, etal.New conceptsin white adipose tissue physiology[J].Braz J Med Biol Res,2014,47(3):192–205.
16. Anderson EA. Hoffman RP,Balon TW,etal. Hyperinsulinemiaproduces both sympathetic neural activation and vasodilationin normal humans[J]. J Clin Invest. 1991;87(6):2246–52.

17. Stocker SD, Gordon KW. Glutamate receptors in the hypothalamic paraventricular nucleus contribute to insulin-induced sympathoexcitation[J].J Neurophysiol,2015,113(5):1302–1309.
18. Gjin N. Uric acid and cardiovascular disease[J]. Clin Chim Acta. 2018;484:150–63.
19. Biscaglia S. Ceconi C,Malagu M,etal.Uric acid and coronaryartery diseasdisease:an elusive link deserving further attention[J]. Int J Cardiol. 2016;213:28–32.

Figures

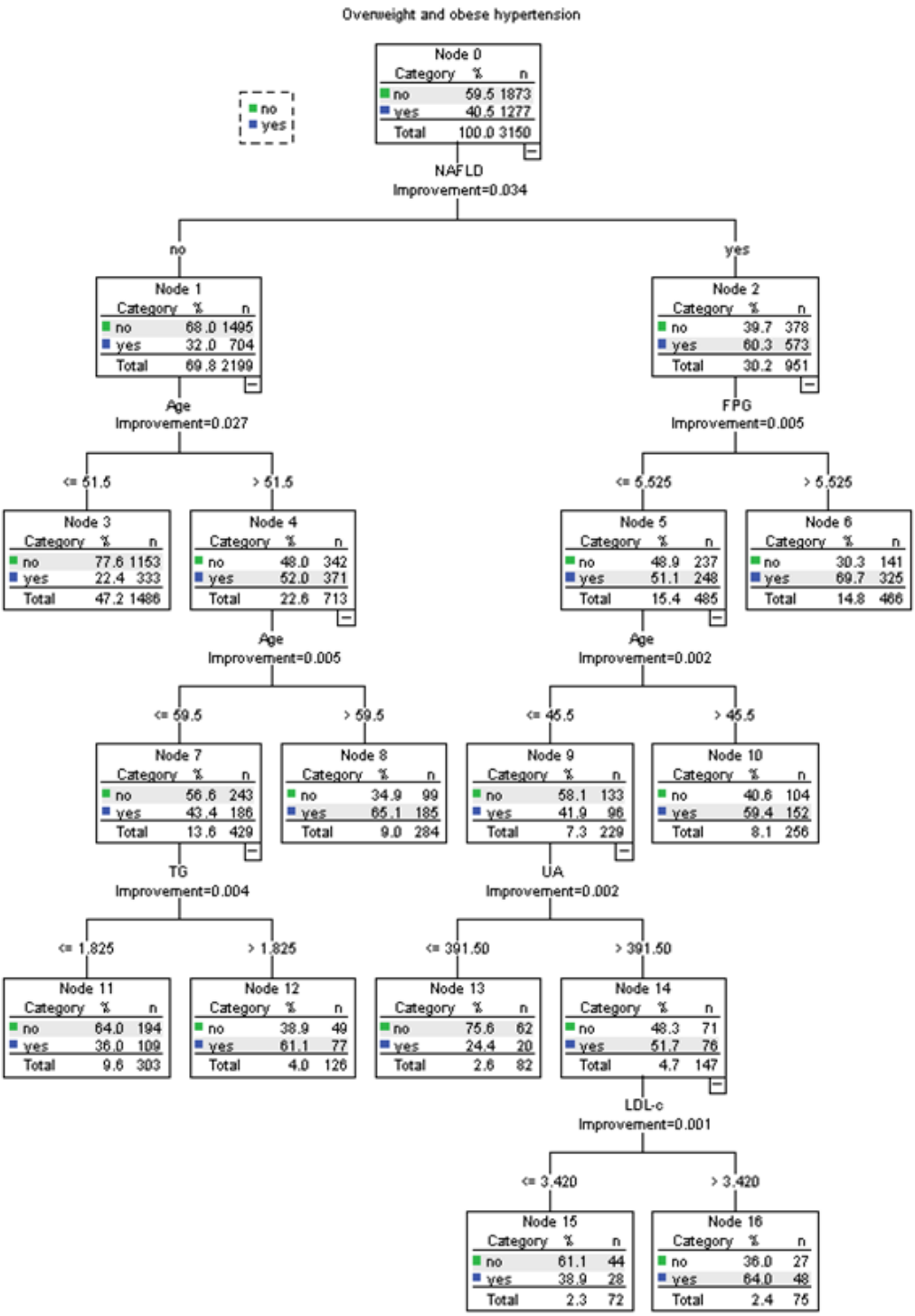

Figure 1

classification tree model of overweight and obesity hypertension

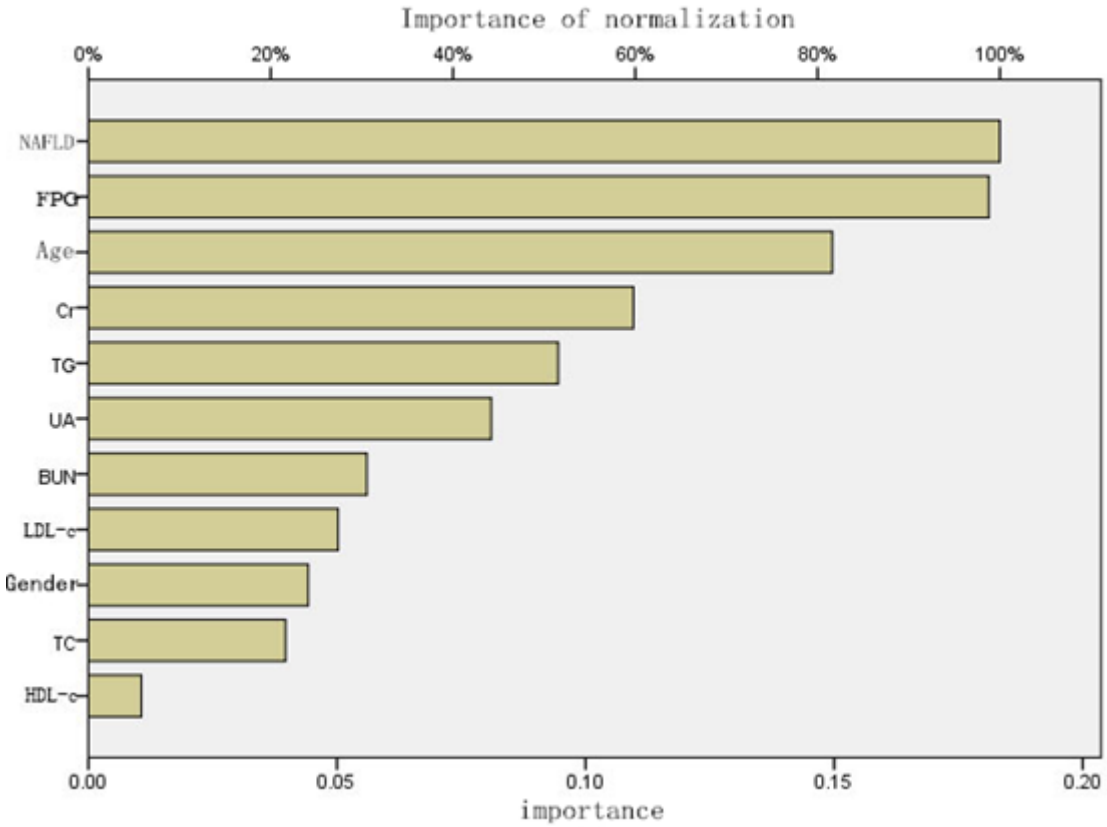

Figure 2

importance of risk factors in BP neural network model

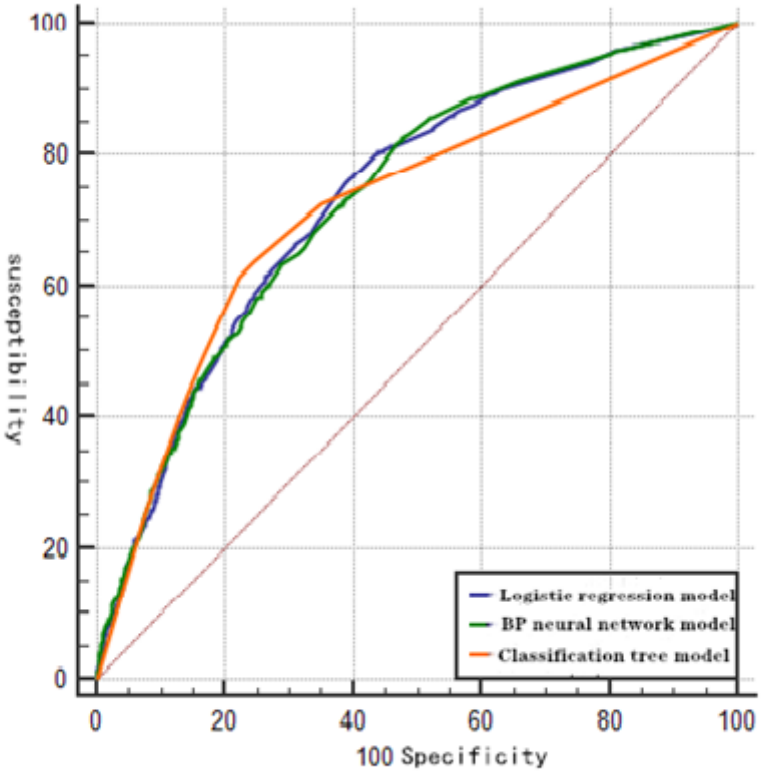

Figure 3

ROC curve comparison of logistic regression model, classification tree model and BP network model