Predicting the Performance of Passive Solar Distillation Using Generalized Regression Neural Network

Siva Sankaran (ssankaran12@yahoo.com)
Saranathan college of Engineering

Research Article

Keywords: Solar distillation, GRNN, yield, efficiency, prediction and accuracy

Posted Date: April 12th, 2021

DOI: https://doi.org/10.21203/rs.3.rs-406858/v1

Abstract

In this study, the performance appraisal of the passive double slope solar distillation (PDSSD) was predicted using the generalized regression neural network (GRNN) model. The performance estimation of passive solar distillation is a complicated one because of unsteady and uncertain atmospheric conditions. For this purpose, a set of experiments has conducted for seven successive days, and results were compared with the GRNN model. The proposed GRNN consists of five inputs (solar irradiance, ambient temperature, basin temperature, surface water temperature, glass cover temperature) and two outputs (distillate yield and efficiency). Such network architecture was trained and validated with a set of experimental data values. The predicted results of the GRNN model follow a good trend with experimental data. The overall accuracy of the predicted GRNN is 99.58%.

1 Introduction

Solar distillation is a device used for converting saline /brackish water into pure water. Generally, it can be classified as active and passive solar distillation [8]. The main source of solar distillation system is solar energy. Among various alternate energy resources, solar energy is most abundant and pollution-free [4]. Numerous resource studies have been processed for the solar distillation system in terms of increasing the rate of evaporation and heat transfer to the system and integration with other solar energy devices.

Due to the concern of water conservation, many researchers concentrated on modifying and integrating solar distillation with other experimental approaches. But, some researchers target artificial intelligence (AI) techniques to predict and optimize the performance of such thermal systems. The commonly used AI techniques are ANN, ANFIS, Fuzzy logic, and other AI techniques [2]. From the above AI techniques, many researchers suggest ANN for the perfect prediction of the system efficiency. Such a proposed ANN model has the ability to predicting performance with less than 5% error. In particular, such predicted ANN model is used in the solar distillation system to predict (i) hourly efficiency (ii) performance (iii) evaporation and heat transfer rate (iv) distillate yield (iv) and maintain optimal temperature condition in the solar distillation system. But ANN can predict the performance only with more experimental readings. Reddy et al. [9] highlighted major applications of the SDS in treating brackish water, reverse osmosis reject, air-conditioning reject, sewage water, alcohol, fertilizers etc.[3] It is also inferred that the demand for distillation of fluids with impure substances goes on increasing day by day. However the demand for quantitative performance improvement goes on increasing with respective quality water requirements. While some researchers focused on the performance improvement by inserts and geometrical modifications, remaining researchers opted for various AI techniques as a best alternative mean [5].

Suganthi et al. [10] concluded that integration of AI into the field of RES's leads to further performance improvement. AI techniques are widely used by RES's based researchers to optimize and predict the performance of various SECD. Rizwan et al. [1] in their fuzzy logic-based modeling system they estimated global solar irradiance using different meteorological parameters. Results obtained from that FLES are in good agreement with experimental real-time values. Besides, results compared with the artificial neural network (ANN) based predictive model. An alternate to ANN a generalized regression neural network (GRNN) was recommended by D. F. Specht in 1991 [7]. The significant use of GRNN includes regression and prediction. It represents the modified technique on the basis of nonparametric regression. Such a neural network model is able to predict the model with less than 5% error. The advantages if the GRNN model as follows:

1. Simple architecture compared to ANN with multiple hidden layers [9]
2. Ability to predicting the performance of the system with more precise than ANN
3. GRNN predicting the results within 30ms.
4. Flexible back propagation algorithm.
5. A user with basic programming skills is adequate for model design.

From the above literature study following research, gaps were spotted

1. To develop the model for predicting the performance of solar distillation systems in a precise manner.
2. To predict the rate of evaporation and heat transfer of the system

3. To predict the hourly distillate output and efficiency of the solar distillation system.

4. To reduce the cost, energy, and time on experimental readings.

5. To verify and validate the experimental results.

Thus in this investigation, a GRNN tool is modeled to predict the performance of a passive solar distillation system. To the best of my knowledge, from the above literature study, for the first time, this is the first investigation paper to predict the performance of passive solar distillation using the GRNN prediction model. The novelty of this paper describes in the following sections. Here, five input parameters (solar irradiance, wind velocity, ambient temperature (AT), surface water temperature (SWT), glass cover temperature (GCT), and basin temperature (BT) and two output parameters distillate yield (DY) and hourly efficiency (HE) have considered. For experimentation, a double slope single basin solar distillation system was designed and fabricated.

2 Material And Methods

2.1 Experimental Setup

Fig 1 shows the schematic diagram of the double slope single basin solar distillation. The basin of the solar distillation is made up of black kadappa stone is situated in a steel frame structure. The system consists of a water storage tank, basin, and plexiglass cover, temperature measuring equipment, measuring jar, pipe connections, and steel frame structure. The overall dimensional value of the solar distillation is l=1m, b=0.5m, h=0.16m, basin cover area= 0.59m^2 and basin line area= 0.5m^2. The solar distillation setup was kept in a north-south direction with an inclination angle of 240. Temperature measurement was carried out using a digital thermometer of 0.10^{0}C resolution with ± 10 accuracy. The hourly varied solar irradiance was observed with the aid of a solar pyranometer made of Gantner Instruments with a range of 0-2000W/m^2 and an uncertainty of ±0.67%. Similarly, wind velocity was obtained using a wind sensor of Gantner Instruments with the range of 0-5m/s and uncertainty ±2%. To ensure the accuracy and reliability readings, the experiments were conducted for seven continuous days from 4 Feb 2020 to Feb10, 2020, in the Department of Mechanical Engineering at Saranathan College of Engineering, Tiruchirappalli (10.7905° N, 78.7047° E), Tamil Nadu, and India.

3 Formula For Calculating Thermal Efficiency

The overall thermal efficiency of the solar distillation is calculated using following equation which is the ratio of product of mass (kg) and latent heat of vaporisation to the solar irradiance [11] which can be formulated as follows:

ηth = (1)

4 Uncertainty Analyses

Experiments are conducted to examine the double slope solar distillation, but the corresponding quantities are subjected to uncertainties. Such uncertainties in the experimental results are due to various errors. [6] In order to determine the uncertainties respected with the experimental results are calculated as follows.

=√( ) ( ) ( ) (2)

5 Grnn Data Reduction

The arithmetical basis of GRNN is for predicting the performance of solar distillation and it is a function nonlinear regression analysis of solar distillation between its output parameters and dominating input parameters. The relation between the values of independent and dependent variables is given by refs.

∑

(3)

$\sum$

are the input and output samples; n indicates the number of training samples; σ defines smoothing parameter. express the Euclidean distance between and , which is based on following equation.

= (4)

6 Implementation Of Grnn Prediction

Generally, GRNN prediction model has been in written in three coded languages namely Matlab, R language and python program. For this study, a suitable model was done using Matlab 2015. By the consideration of solar distillation the predicted GRNN model can be applied directly to the Matlab 2015.

Syntax:

= [802.4 877.5 952.6 1018.42 1031.39	(% solar irradiance in W/m^2)
933.41 858.07 594.09]	
T= [21.22 19.47 17.91 28.78 16.61 18.34	(% hourly efficiency of solar distillation)
19.93]	
net= new grnn (I, T)	(% the network is simulated for a new
	input)
P=1;	(% simulate “P”)
Y= sim (net,P)	
Y=21.22	(% total time taken for output Y is 50-
	65m/s)

By introducing the GRNN function, net = new grnn (I, T) in the coding, the following steps are used in the forward back propagation algorithm technique.

Step 1: Initialize the total number of experimental data values. A day experiment has 8 data points. As a result of a real-time experiment from Feb 4, 2020, to Feb 10, 2020, an average of 10 data points is considered.

Step 2: Among the total data values, 60% (6 numbers) are considered to train the model. The aim of train the model is to identify the optimum values of σ in Eq (2). The suitable way is to identify the position is where the minimum value of mean squared error (MSE). Initially, separate the data set values into two divisions one such as training sample and test sample. Then, apply the GRNN model on the test data sets based on training data values and easily find out the mean squared error (MSE). Now to find the minimum squared error for present value of σ.

Step 3: Find out distances using Eq (3)

Step 4: Addition of weights (W= W_1+W_2+W_3+……+W_8)

Step 5: Calculate the weights based on activation function

Step 6: Accumulate the output values with calculated weights.

Step 7: Then the output values can get by dividing the step 6 with step 5 data values. Based on the output radial units, the regression unit is used in GRNN prediction.

7 Examine The Grnn Data Model Accuracy And Error With Experimental Value Sets

Sridharan et.al [5] applied the expression for comparing the error and accuracy of the experimental system values with the GRNN model. The local error percentage is a ratio of difference between predicted and experimental measured values to the experimental value based on following condition.

$$= \quad (5)$$

Particular system percentage accuracy (A_{in}) is then calculated using

$$= \quad (6)$$

Total accuracy is calculated using average of individual accuracy of the system

(7)

Where, n is the number of data values. The estimated error and accuracy of the system is shown in Table 4.

8.1 Experimental Analysis

In this investigation, the unsteady performance variation in the double slope solar distillation was obtained. Table 1 and Fig 4 show the changes in dominant parameters with respect to the time duration (hrs.).

From Fig 4 and Table 1, it revealed that the hourly efficiency of the solar distillation system is maximum when solar irradiance is high (at 12.15 p.m.) and minimum when solar irradiance is low (at 04.15 p.m.). Variation in hourly efficiency is between a minimum of 594.09 W/m^2 to a maximum of 1031.39 W/m^2.

From Fig 5 and Table 3, it shows that the maximum distillate yield is at 02.15 p.m. and sustains the energy in the system till the end of the process.

The efficiency of solar distillation depends on the solar irradiance, wind velocity, ambient temperature (AT), surface water temperature (SWT), glass cover temperature (GCT), and basin temperature (BT). From Fig 4 and Table 1 it clearly is shown that the efficiency of the solar distillation is gradually increasing from initial hours. Efficiency is 28.79% (maximum) when solar irradiance ambient and corresponding temperatures are high. Variation in the solar distillation efficiency is in the range of 16.62% to 28.79% and the overall efficiency of the system is 19.88%.

8.2 Grnn Model Analysis

The proposed GRNN model for predicting the performance of solar distillation is shown in Table 3 and compared with the experimental result data as shown in Table 1. The agreement between the predicted GRNN model and experimental results of solar distillation is represented in graphical form as shown in Fig 4. As specified in Table 3, the prediction value of hourly efficiency of GRNN model is 99.58% with an error of ±3.97. Similarly, the prediction value of distillate yield is 99.98% with an error of ±0.81.

9 Conclusions

An experimental study on (PDSSD) was performed to evaluate the performance of solar distillation. The experimental data are compared and validated using predicted GRNN model. The outcomes of the investigation are as follows.

1. The maximum temperatures of solar distillation is observed as maximum (38.2^{0}C, 48.3^{0}C, 52^{0}C, 50.15^{0}C) when solar irradiance is maximum (1031.4 W/m^2) at 01.15 p.m.
2. The maximum efficiency of the solar distillation is 28.79%. During the seven day of operation the maximum efficiency is observed at noon hours only. (12.00 – 1.30 p.m.)

3. The accuracy of the predicted GRNN model is 99.58% with error of 3.97%. Thus, the proposed GRNN model follows similar trend and good agreement with real-time experimental values.

Nomenclature

m mass of evaporated water (kg/s)

L latent heat of vaporization (kJ/kg-K)

Aarea of glass cover (m^2)

Iincident radiation intensity (W/m^2)

ttime (seconds)

Qtotal heat stored (W)

C_p specific heat (J / kg-K)

T temperature (°C)

T_a ambient temperature (°c)

G solar irradiance (W/m^2)

η efficiency (%)

Abbreviation

PDSSBSD passive double slope single basin solar distillation

BT basin temperature

BWT basin water temperature

GCT glass cover temperature

AT ambient temperature

SWT surface water temperature

HE Hourly efficiency

DY distillate yield

AI artificial intelligence

RES renewable energy source

ANFIS adaptive neuro-fuzzy inference system

References

1. Rizwan,M., Majid Jamil, Sheeraz Kirmani, Kothari,D,P., 2014 Fuzzy logic based modeling and estimation of global solar energy using meteorological parameters, Energy x(2014), pp. 1-7.
2. Sridharan, M., and Jayaprakash, G., 2020 "Verification and Validation of Solar Photovoltaic Thermal Water Collectors Performance Using Fuzzy Logic." ASME. J. Verif. Valid. Uncert. December 2019; 4(4): 041005. https://doi.org/10.1115/1.4045895.

3. Sridharan, M., Jayaprakash, G., Chandrasekar, M., Vigneshwar, P. Paramaguru, S., and Amarnath, K., 2018, “Prediction of Solar Photovoltaic/ Thermal Collector Power Output Using Fuzzy Logic,” ASME J. Sol. EnergyEng., 140(6), p. 061013.
4. Sridharan, M., 2020, “Predicting Performance of Double-Pipe Parallel- and Counter-Flow Heat Exchanger Using Fuzzy Logic,” ASME J. Thermal Sci. Eng. Appl., 12(3), p. 031006.
5. Sridharan, M, Devi, , Dharshini, C.S., and Bhavadarani, M., 2019, “IoT Based Performance Monitoring and Control in Counter Flow Double Pipe Heat Exchanger,” Internet of Things, 5, pp. 34–40.
6. Prakash, O., Kumar, A., Kaviti, A. K., and Kumar, P. V., 2015, “Prediction of the Rate of Moisture Evaporation From Jaggery in Greenhouse Drying Using theFuzzy Logic,” Heat Transfer Res., 46(10), pp. 1–6.
7. Prakash, O., and Kumar, A., 2014, “ANFIS Modelling of a Natural Convection Greenhouse Drying System for Jaggery: An Experimental Validation,”Int. J. Sustain. Energy, 33(2), pp. 316–335.
8. NV Siva Sankaran & M Sridharan (2020) Experimental Research and Performance Study of Double Slope Single Basin Solar Distillation Still Using CFD Techniques, International Journal of Ambient Energy, DOI: 1080/01430750.2020.1852109.
9. Reddy,K.S., Sharona,H., Krithika,D,, Ligy Philip., Performance, water quality and enviro-economic investigations on solar distillation treatment of reverse osmosis reject and sewage water, Solar Energy 173(2018), pp. 160-172.
10. Suganthi,L.,Iniyan,S.,Anand A.Samuel., 2015 Applications of fuzzy logic in renewable energy systems – A review, Renewable and Sustainable Energy Reviews 48(2015), pp. 585-607.
11. Velmurugan V, K. Naveen Kumar, T. Noorul Haq, K. Srithar, (2009). Performance analysis in stepped solar still for effluent desalination, Energy 34 1179–1186.

Tables

Table 1 Experimentally measured average values of double slope solar distillation parameters during February 4 2020 to February 10 2020 at Saranathan College of Engineering, India

S. No	Time (H)	Solar Irradiance (I) (W/m^2)	Wind Velocity (U) (m/s)	Ambient temperature (AT) (T_a)(^0C)	Surface Water Temperature (SWT) (T_w)(^0C)	Basin Temperature (BT) (T_b)(^0C)	Glass Cover Temperature (GCT) (T_g)(^0C)	Distillate Yield (DY) (ml)	Hourly Efficiency (HE) (%)
1	9.15 a.m.	802.4	1.13	29.2	36.4	42.15	39.28	0.0046	21.22
2	10.15 a.m.	877.5	1.51	34.2	36.75	40.58	38.67	0.0082	19.48
3	11.15 a.m.	952.6	2.47	32.6	41.75	45.18	43.47	0.0181	17.92
4	12.15 p.m.	1018.42	1.58	34.4	45.7	47.9	46.8	0.0206	28.79
5	01.15 p.m.	1031.39	1.56	38.2	48.3	52	50.15	0.0215	16.62
6	02.15 p.m.	933.41	2.36	37.1	47.25	52.43	49.84	0.0815	18.35
7	03.15 p.m.	858.07	3.21	35.2	45.5	48.2	46.85	0.0154	19.93
8	04.15 p.m.	594.09	1.74	34.7	38.05	44.03	41.04	0.0098	16.79

Table 2 Uncertainty analysis of various parameters

S.No	Measured quantity	Instruments	Range	Uncertainty
1	Ambient temperature	Hygrometer	20 °C to 50 °C	±0.1 °C
2	Basin Temperature	Mextech , digital	−50 °C to +110 °C	±0.1 °C
		thermometer		
3	Solar Irradiance	Gantner	0–2000 W/m^2	±0.67%
		instruments,		
		pyranometer		
		Gantner		
4	Wind velocity	instruments, wind	0–50 m/s	±2%
		speed sensor		
5	Distillate yield	Scaled cylindrical	0–250 ml	±2.23
		container		

Table 3 Predicted Values of GRNN model

S.No	Time (H)	Solar Irradiance (I) (W/m^2)	Wind Velocity (U) (m/s)	Ambient temperature (AT) (T_a)(^{0}C)	Surface Water Temperature (SWT) (T_w)(^{0}C)	Basin Temperature (BT) (T_b)(^{0}C)	Glass Cover Temperature (GCT) (T_g)(^{0}C)	Distillate Yield (DY) (ml)	Hourly Efficiency (HE) (%)
1	9.15 a.m.	802.4	1.13	29.2	36.4	42.15	39.28	0.0076	21.22
2	10.15 a.m.	877.5	1.51	34.2	36.75	40.58	38.67	0.0130	19.48
3	11.15 a.m.	952.6	2.47	32.6	41.75	45.18	43.47	0.0147	17.32
4	12.15 p.m.	1018.42	1.58	34.4	45.7	47.9	46.8	0.0196	28.79
5	01.15 p.m.	1031.39	1.56	38.2	48.3	52	50.15	0.0157	16.64
6	02.15 p.m.	933.41	2.36	37.1	47.25	52.43	49.84	0.0594	18.35
7	03.15 p.m.	858.07	3.21	35.2	45.5	48.2	46.85	0.0463	17.46
8	04.15 p.m.	594.09	1.74	34.7	38.05	44.03	41.04	0.0679	16.62

Table 4 Accuracy of the predicted GRNN model

S.No	Time (H)	Accuracy (DY) (%)	Accuracy (η) (%)
1	09.15 a.m.	99.97	99.99
2	10.15 a.m.	99.95	99.99
3	11.15 a.m.	99.96	99.41
4	12.15 p.m.	99.99	99.83
5	01.15 p.m.	99.94	99.96
6	02.15 p.m.	99.97	99.99
7	03.15 p.m.	99.96	97.53
8	04.15 p.m.	99.94	99.99

Figures

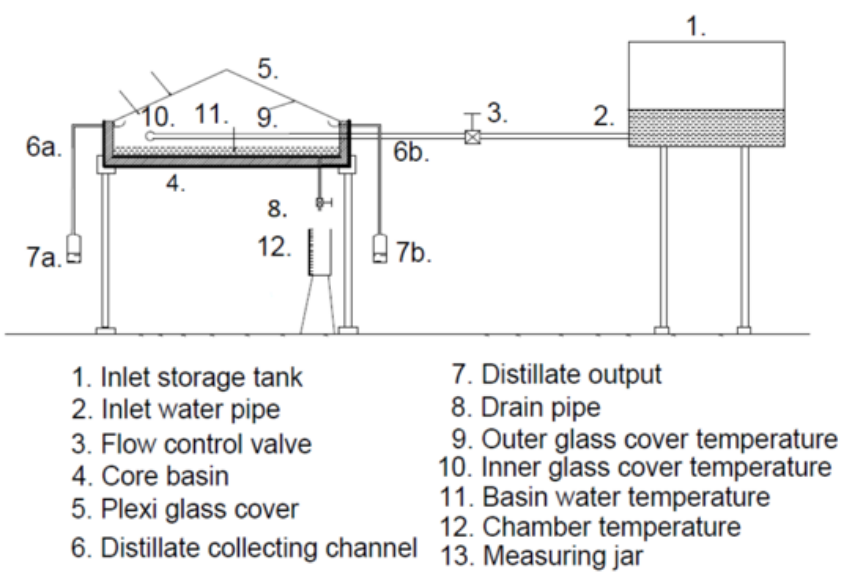

Figure 1

The schematic layout of double slope single basin solar distillation system

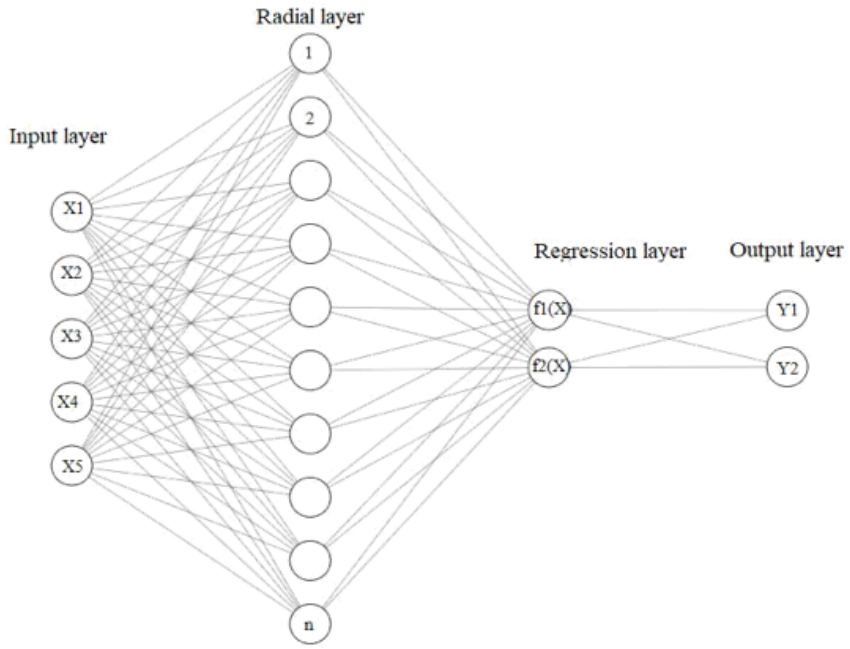

Figure 2

General 5-n-2-2 architecture

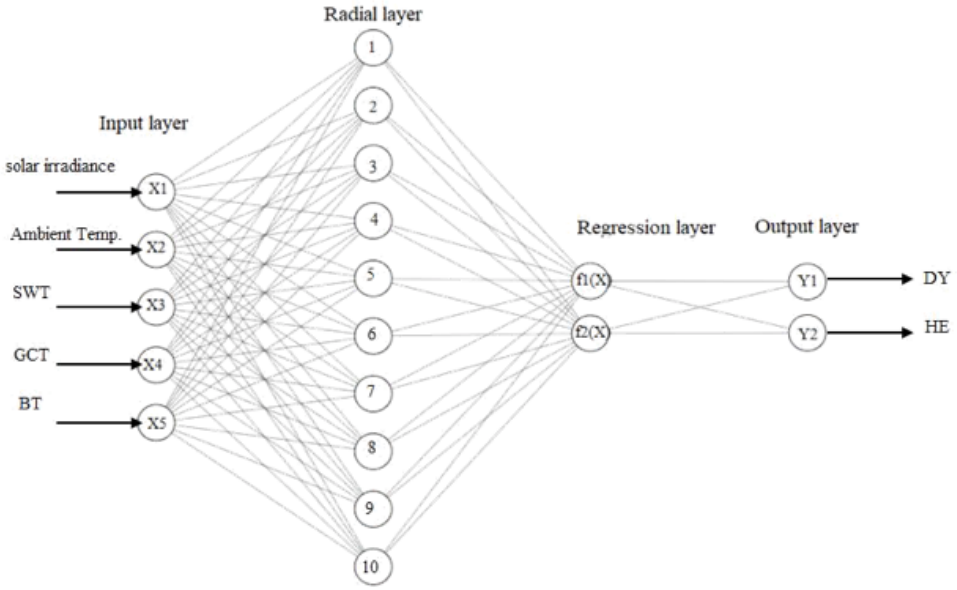

Figure 3

General 5-10-2-2 architecture

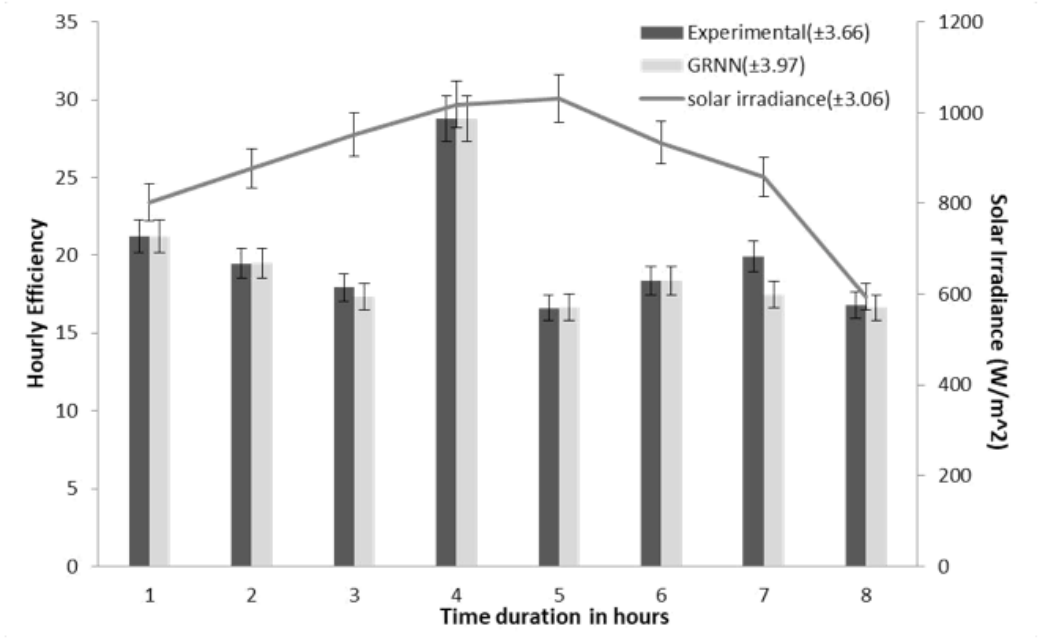

Figure 4

Variation between experimental and GRNN-predicted hourly efficiency with respect to time duration

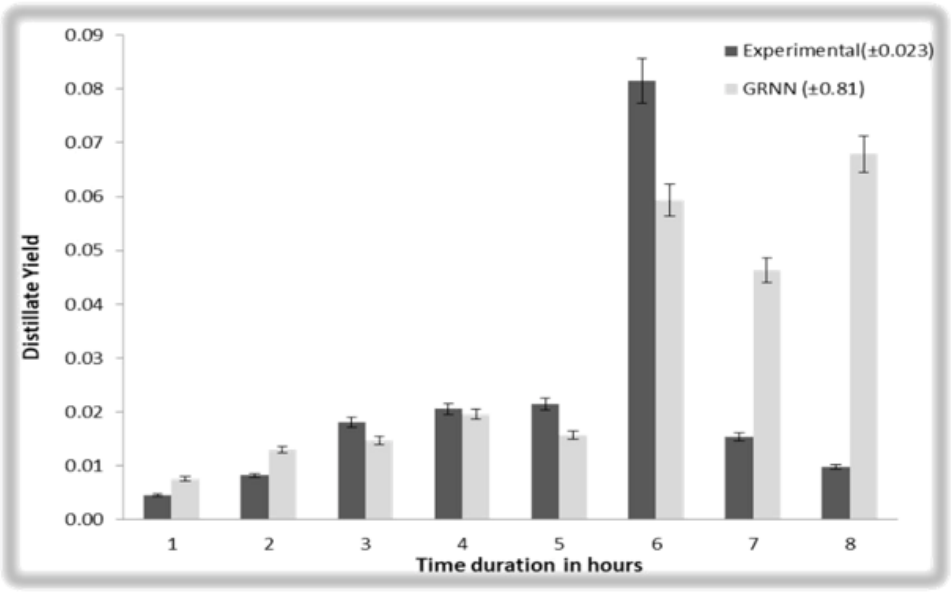

Figure 5

Variation between experimental and GRNN-predicted distillate yield with respect to time duration

Supplementary Files

This is a list of supplementary files associated with this preprint. Click to download.

- Appendix1.docx