Application of Nitrogen Shock Fracturing Technology on Coalbed Methane Well

Qingling Tian (116593422@qq.com)
State Key Laboratory of Coal and CBM Co-mining

Chunsheng Hao
State Key Laboratory of Coal and CBM Co-mining

Junjun Li
State Key Laboratory of Coal and CBM Co-mining

Wei Wang
State Key Laboratory of Coal and CBM Co-mining

Case Report

Keywords: coalbed methane, nitrogen shock fracturing, fracturing technology, tool string

Posted Date: July 22nd, 2020

DOI: https://doi.org/10.21203/rs.3.rs-43652/v1

Abstract

Water sensitivity exists in reservoir during traditional hydraulic fracturing. Nitrogen shock fracturing was put forward to solve these problems. By suddenly pushing high-energied nitrogen into perforated casing ,This technology clears the near-wellbore way gas out. A set of down-hole tool string, together with the fracturing ground units and nitrogen shock fracturing project, form a nitrogen shock fracturing system. The on-site researches show that this kind of system can do the nitrogen shock fracturing as designed. It actually makes the gas production better. In the future researches, we are committed to improve this technology to suit for more geological condition .

1 Introduction

Coalbed Methane(CBM) is an unconventional natural gas generated and stored in coal seams. With 36.8 trillion m^3 CBM resource ,China ranks the third in the world. In the run-up to the tense of international energy situation, development of CBM has a very broad market prospect and considerable safety and environmental effects. Due to the complex dual-porosity system of coal ,the size, shape, porosity and connectivity of matrix pores and fracture networks in coal determined the unique accumulation mechanism of CBM, called low-porosity and ultra-low permeability gas reservoirs. Thus, a suitable stimulation approach is indispensable. Currently, hydraulic fracturing is the most common method. With the development of science and technology, the hydraulic fracturing method has been continuously improved, from the early clean water fracturing to the current multi-stage fracturing of horizontal wells, not only the cost is greatly reduced but also the stimulation effect is remarkable. However, the existing hydraulic fracturing technology of coalbed methane wells has some defects: water molecules are too large to enter the matrix microporous system where coalbed methane is located. Meanwhile, the hydration of clay minerals in coal rock would greatly reduce the porosity and permeability of coal reservoir. In addition, the huge water consumption of hydraulic fracturing exerts great pressure on resources and environment. Therefore, France has legislated to ban hydraulic fracturing.

Based on the problems above, the technical concepts of water-free

fracturing (N_2, liquid CO_2, LPG, and liquid nitrogen) were first proposed in western countries. Nitrogen shock fracturing, as one of the water-free stimulation approaches, was applied in horseshoe valley coal formation in Canada and achieved good results, providing new technical support for the large-scale unconventional oil and gas exploitation. As an emerging fracturing method that is different from the traditional hydraulic fracturing, nitrogen shock fracturing utilizes the high-pressure, high-speed and low-friction loss of coiled tubing to deliver nitrogen to break the gas way-out, which greatly improves the operation efficiency: Injected into the coal seam through coiled tubing, continuous high-pressure nitrogen expanded the cracks; the filtration of fracturing fluid is effectively reduced to protect the reservoir. All of its superiority is suitable for low permeability, low pressure and water sensitive coal seam, has opened a new door into the stimulation of coalbed methane wells.

2 Experiment Equipment And Method

2.1 Basic Principles

CBM wells must be fracked to increase gas production. The use of nitrogen shake fracturing could minimize the impact of water sensitivity from clay minerals on reservoir. The compressed nitrogen, forced into the formation and wellbore ,inflates the space the moment of flowing back, which greatly increases the velocity of fluid back. It is important for the development of low permeability coal reservoir that the well entering liquid is rapidly discharged to the surface in large quantities. In addition, the large amount of water, used in conventional hydraulic fracturing, causes severe pressure on resources and environment in areas where there are water scarcity issues. Nitrogen fracturing can effectively reduce the dependence of fracturing on water, and has achieved good results in the dry coal of multiple, thin and shallow layers in the central Alberta of Canada.

Nitrogen shock fracturing uses a special tool to immediately release compressed nitrogen in a certain pressure in the perforated casing, forming a vibration and injecting plenty of nitrogen into the fractures. The suddenly released high-energy gas creates micro-fracture network system in the coal matrix and communicates with original fractures to improve the permeability of coal reservoir, removes the block around the well zone to clean the gas-way-out. The fracturing process can achieve the following results:

1. The compressed nitrogen could keep 60 MPa pressure in the bottom hole. The force created by instantaneous release of such pressure is much higher than the tensile strength of the well surrounding rock .Fractures are made in the formation rock.
2. The compressed nitrogen has both strong expansion capacity and large elastic energy. At the formation temperature, liquid nitrogen turns into gas phase and acts on the surrounding rock by volume expansion. Fractures are expanded in a certain degree.
3. Nitrogen shock fracturing can inhibit the clay swelling of water-based fracturing fluid in clay mineral formations, minimize the pollution of fracturing fluid on the formation, and increase the extraction energy after high-pressure nitrogen expansion.
4. Adsorption displacement. The adsorption capacity of N_2 is weaker than that of CH_4,thus, the purpose of replacing CH_4 cannot be achieved through competitive adsorption. The displacement of adsorbed methane is realized by reducing the partial pressure of free methane to affect its isothermal adsorption curve under constant pressure.

2.2 Technology and equipment

Nitrogen shock fracturing is a kind of multi-layer vibration fracturing in single well, which uses a ball-off device, high pressure, large injection of nitrogen, dragging construction to achieve multiple vibration fracturing of each target layer.

2.2.1 The main vibration part

The core of Nitrogen shock fracturing is a ball-off high-energy gas fracturing device, including the upper packer unit, vibration trigger unit, energy release unit, pressure recording unit, lower packer unit and guide shoe connected successively from top to bottom, as shown in figur1 .

The upper and lower packers together seal the fracturing target layer. Considering the different thickness of the target layer, different length segments can be used between the upper and lower packers to make sure the vibration work completely on the target layer. The upper packer unit connects to the ground fracturing truck through coiled tubing. A tailor-made ball is put into the tubing to the ball seat to form a high-pressure section–the vibration trigger unit. With the ball broken at 50 Mpa ,the pressured nitrogen is released to form a vibration. The high-energy gas nitrogen burst through the energy release unit. The device can satisfy the two main contents of nitrogen vibration and release, and ensure that the released gas can effectively enter the target layer.

2.2.2 Ground equipment

Based on the physical characteristics of nitrogen and the related process of nitrogen shock fracturing technology. The whole fracturing process is divided into five systems : liquid nitrogen tank system ,high-pressure pumping system, conveying pipeline and equipment system, downhole tool string system and flare system. The ground equipment includes 2 liquid nitrogen tank trucks, 2 liquid nitrogen pump trucks, 2 coiled tubing trucks, a set of vent pipeline, a flare torch ,a sump and several control valves at the necessary positions, which is shown in Fig. 2.

2.2.3 Coiled tubing

According to nitrogen shock fracturing process requirements, coiled tubing is required to withstand pressure of 80 MPa, the ID of coiled tubing joints and safety joints (hydraulic releasing tool) is not less than the inner diameter of coiled tubing. All the way of the ball, from ball injector to the end of coiled tubing, should be as smoothly as possible. The coiled tubing parameters is shown in Table 1:

Table 1
Coiled tubing parameters

Name	OD (mm)	Wall thickness (mm)	Length (m)	yield strength (MPa)	section surface (m^2)	Volume (m^3)
Coiled tubing	50.8	4	1600	62	0.000582	2.31

2.3 The work process

1. System Cleaning

Set up the whole system and do a leak detection ; then drop down the coiled tubing to about 2 m up from well bottom; switch on one liquid nitrogen fracturing pump with low power ; open cycling system valve 4, 7, 9 and 12 ,close vent valve 5 and 10. The high-pressured nitrogen, not in a high speed, is injected to the tubing and annulus access, thus, the air water mixture is blowed out from coiled tubing to the mud pit, which is kind of a gas-lifting.

Throttles are used to control backflow during the process. Open vent valve 11 to flare the gas reflux when the outlet water volume decreases and the air volume increases. When there is no water and debris out, stop pumping nitrogen in the maintenance pipeline system to relieve pressure.

2. Pressure Test

Do a pressure test to the whole system after nitrogen pumping truck is cooled down: Shut off all valves of the system and slowly inject nitrogen to raise pressure, observe the change of pressure and the sealing condition of each joint. If there is no obvious leaking, up the pressure to 70 MPa then stop for 5 minutes. The pressure test is completed after confirming that the pressure is stable without leakage. End the pressure test by a controlled pressure release with operation on valve 4 and 5.

3. Single-layer Nitrogen Shock Fracturing

Start a set of frac pumping truck, open the injecting valves 4 and 7, close valves 5 and 9, and inject the ball into the coiled tubing. Continuously pumped from pumping truck to coiled tubing in low velocity ,the high-pressured nitrogen pushes the ball into the ball seat. The system pressure is increasing until reach the maximum pressure that the ball could subject to. As soon as monitored pressure suddenly dropped with ball crushed, turn on the other set of frac pumping truck. All the nitrogen left is pumped into the well in large displacement, which is not less than 800 m^3/min ,by two truck working together. Stopped the trucks when there is no nitrogen left in the tanks. If you want once more shock in the same layer, inject another ball with 300 m^3/min after pressure released then repeat steps above.

4. Multi-layer Nitrogen Shock Fracturing

If you want to fracture multi-layer in one well, you should fracture from the lowest layer. After finished the work of first layer, move the cup packers to the position of target layer calculated before work, then repeat the one-layer nitrogen shock fracturing. After that ,continue to move the packers up to the next target and do fracturing until the fracturing of all target layers is completed.

3 Application And Results

3.1 Application

The special characteristics of coal reservoirs determined that coal reservoirs are more vulnerable to serious reservoir damage in engineering operations.In the process of CBM well construction, the intrusion of drilling fluid and fracturing fluid into the micro-fractured coal seam have a great impact on the coal seam's permeability, desorption capacity, strength, deformation capacity and stress around the well. Due to the low density of nitrogen, it is difficult to carry proppant by nitrogen in the process of fracturing, which requires that the coal quality should not be too soft, and requires that there is no water in the coal.

The coal type of two selected CBM wells for nitrogen shock fracturing is hard ,dry coal.The construction data are shown in Table 2.

Table 2
The construction data of N_2 shock fracturing wells

Well	Target coal seam	Coal seam thickness (m)	Pumping pressure (MPa)	Maximum velocity (Nm^3/min)	Break pressure (MPa)	Bottom hole pressure	Volume of Fluid $N_2(m^3)$
SH-X1	3#	6.43	40–50	280	52.54	22.2	27.56
SH-X2	3#	6.66	47–48	450	59.2	10.2	29.43

As the tool string lowered into the designed position, the continually injecting nitrogen put pressure on the ball sealer. When pumping pressure suddenly dropped off by the break of ball, the bottom hole pressure raised for high-pressured nitrogen rushed in. The fleetly, energetic ,plenty of nitrogen fulfilled and enlarged the fracture of target coal seam. It wouldn't stop until all the nitrogen prepared were injected in. Then it ended with nitrogen flared to release pressure.The whole construction lasted for one hour or so.

As you can see in Fig. 4, there was big pressure loss during the construction process;the construction displacement of SH-X2 was better than that of SH-X1, but still had large gap with the advancing level of the world, 1200 m^3/min.

3.2 Results

For its extra exact, timely, information-rich characteristics,micro-seismic fracture monitoring technology is the most widely used monitoring method in reservoir fracturing currently. Nitrogen shock fracturing, as one independent research and development of reservoir stimulation technology, the stimulation result, such as the direction, distribution, ductility of fracture should be tested with the aid of micro-seismic fracture monitoring. The outcome of micro-seismic fracture monitoring showed:The fracturing affected radial is about 140 m, which meet the requirement of fracture-making ability. The results are shown in Table 4.

Table 4
the micro-seismic fracture monitoring result of experimental well

Well		SH-X01	SH-X02
Target seam position /m		344.84 ~ 351.27	349.44 ~ 356.10
Fracture length/m	left flank	136	166
	Right flank	140	134
	total	276	300
Fracture height /m		2.0	1.4
Fracture position		NE60°	NE93°

The aim of stimulation on CBM wells is to increase its productivity. Not long after fracturing, The two experimental wells had a stable production. We recorded the production of the two wells for 103 days. The average gas production of SH-X1 was about 600 m3/day, while that of SH-X2 was almost 1000 m3/day. Obviously SH-X2 got a good result than that of SH-X1, but both the two wells get production better than the hydraulic-fractured wells nearby. So it's come to a conclusion: Nitrogen shock fracturing do stimulated CBM wells and get not so bad results; this technology could take place of hydraulic fracturing in some situation. See the results in Fig. 4.

4. Conclusions

1. Nitrogen shock fracturing technology can effectively reduce the fracturing fluid filtration to protect the reservoir, reduce the partial pressure of methane and promote methane desorption. It is suitable for low-permeability, low-pressure and water-sensitive coal seams, much more important, it has great environmental advantages in areas with scarce water resources
2. The self-developed downhole tool series can succeed in shock release and pressure monitor, which meet the needs of nitrogen shock fracturing.
3. For its operability and multi-use character ,this technology can achieve multi-fracturing in different target layers of the same well. And the stimulation effect is obvious. So this technology is worth spreading.
4. The application shows that the nitrogen shock fracturing has a certain increasing in gas production of CBM well ,but the result could be better. so it is necessary to continue research to improve the fracturing technology and do geological condition adaptability research.

Declarations

Patents

A application for utility patent “ Multi-layer nitrogen shock fracturing process in single well” has been submitted to the national intellectual property administration, PRC, Published Application Number CN 107013200 A.

Acknowledgements

This research was supported by National Science and Technology Major Project(Grant No. 2016ZX05067), the Research Fund of State Key Laboratory of Coal and CBM Co-mining (Grant No. 2018kf08).

References

1. Zhang GJ, Dou LZ, Xu Y (2019) Opportunities and challenges of natural gas development and utilization in China. Clean Technol Environ Policy 21(6):1193–1211
2. Wang J, Feng L, Zhao L (2013) Snowden S. China’s natural gas: resources, production and its impacts. Energy Policy 79(1):690–698
3. Hu J, Li ZY, Huang GS (2013) Opportunities and development proposals about speeding up China's natural gas utilization in low-carbon era. Chemical Industry Engineering Progress 32(10):2267–2273
4. Massarotto P, Iyer RS, Elma M, Nicholson T(2014)An experimental study on characterizing coal bed methane (cbm) fines production and migration of mineral matter in coal beds. Energy & fuels 28(1–2),766–773
5. ChengYF,JiangL,WangHD((2017) Experimental study on pore structure and mechanical properties of stratified coal. International journal of geomechanics 17(12):1–11
6. Liu SQ, Sang S,Zhu QP (2014) Response characteristics and mechanisms of dynamic fluid field for well interference of coal bed methane group wells in production block. Energy Explor Exploit 32(5):771–789
7. Alexeev AD, Feldman EP, Vasilenko, TA(2007)Methane desorption from a coal-bed. Fuel 16: 2574–2580
8. Elwegaa K, Emadi H (2018) The effect of thermal shocking with nitrogen gas on the porosities, permeabilities, and rock mechanical properties of unconventional reservoirs. Energies 11(8):2131–2147
9. Bao X, Eaton DW(2016)Fault activation by hydraulic fracturing in western Canada. Science 354(6318):1406–1409
10. Ramsay John G(2017)Folding and Fracturing of Rocks: the background. Egu General Assembly Conference. EGU General Assembly Conference Abstracts
11. Zhang Y, Xian BA,Sun FJ,Bao QY (2010) Reason analysis and stimulation measures of low coalbed methane gas production wells. Nat Gas Ind 04(30):55–59

12. Zhang XX, Wang JG, Gao F,Wang XL((2018) Numerical study of fracture network evolution during nitrogen fracturing processes in shale reservoirs. Energies 11(10):2503–2515
13. Cai CZ, Huang ZW, Li GS (2016) Feasibility of reservoir fracturing stimulation with liquid nitrogen jet. J Petrol Sci Eng 144:59–65
14. Zhang YP, Yang ZM, Xian BA(2006)Coal-bed gas stimulation technology. special oil & gas reservoirs 13:95–98
15. Keshavarz A, Badalyan A, Carageorgos T, BedrikovetskyP, Johnson R (2015) Stimulation of coal seam permeability by micro-sized graded proppant placement using selective fluid properties. Fuel Guildford 144:228–236
16. Yan YX, Zhang YH, Chen X, Luo JQ, Zhang XW (2013) The application of micro-seismic technology in fracture monitoring. Geosci Front 20(03):270–274

Figures

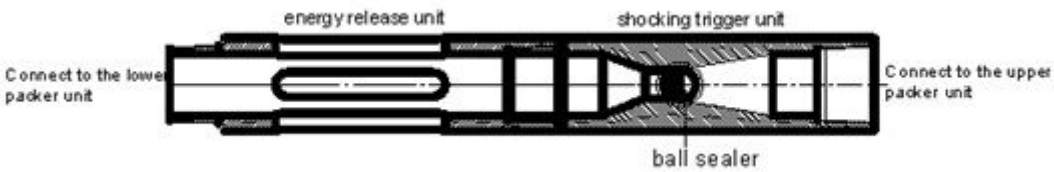

Figure 1

The main vibration part

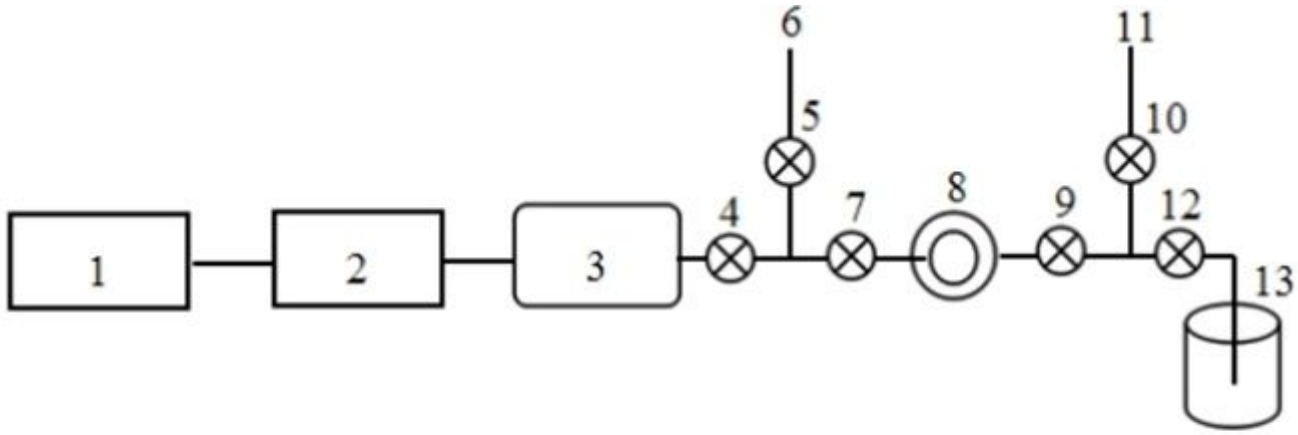

1-Nitrogen tanks;2-Pumpping truck;3-Coiled tubing truck;4、5、7、9、10、12-Valves;6-Vent pipeline;8-Well head; 11-Flare torch; 13-Sump

Figure 2

Ground equipment

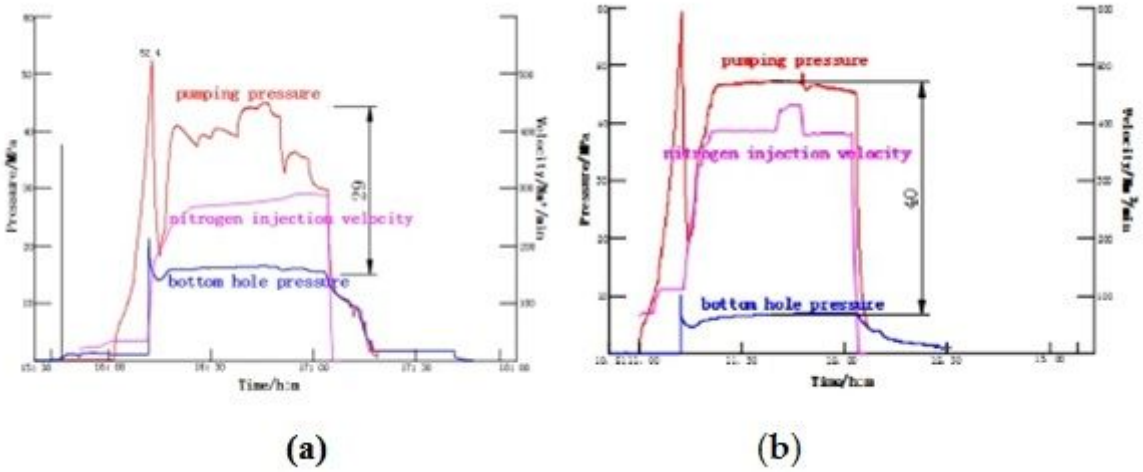

Figure 3

The fracturing curve of experimental wells. (a) is the fracturing curve of SH–X1; (b) is the fracturing curve of SH-X2.

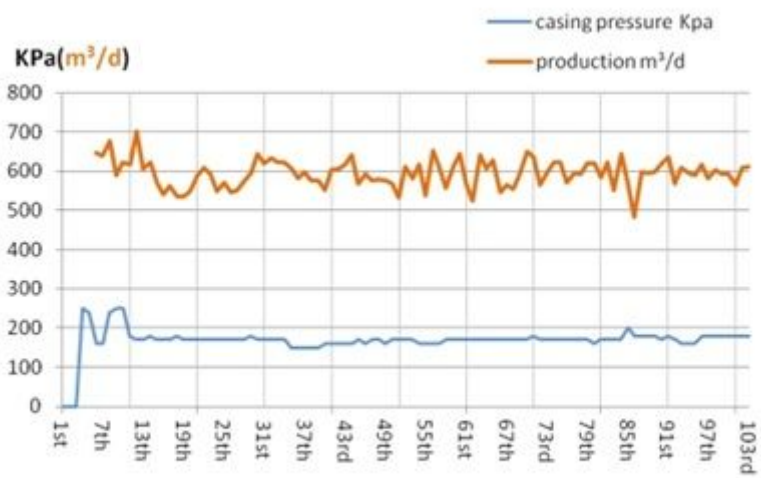

The gas production of SH-X1 in 103 days

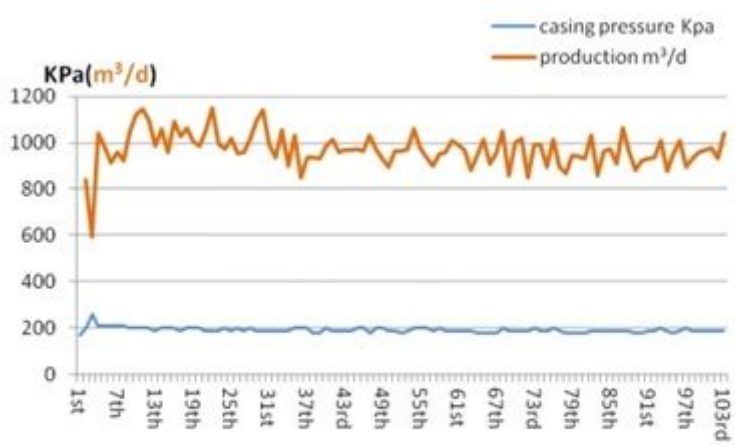

The gas production of SH-X2 in 103 days

Figure 4

The gas production of experimental wells