Delayed-interval Delivery in Multiple Pregnancies: Short- and Long-term Outcome

Beate Hüner (beate.huener@uniklinik-ulm.de)
Ulm University https://orcid.org/0000-0001-9169-5642

Jochen Essers
University Hospital Ulm

Lisa Schiefele
University Hospital Ulm

Sabine Schütze
University Hospital Ulm https://orcid.org/0000-0001-7605-1486

Frank Reister
University Hospital Ulm

Wolfgang Janni
University Hospital Ulm

Miriam Deniz
University Hospital Ulm https://orcid.org/0000-0002-7327-7735

Research Article

Keywords: delayed–interval delivery, premature birth, multiple pregnancy, cerclage

Posted Date: August 19th, 2021

DOI: https://doi.org/10.21203/rs.3.rs-526054/v1

Abstract

Purpose

Multiple pregnancies are at higher risk of preterm birth due to premature labor, cervical insufficiency, or premature rupture of membranes. However, both children do not necessarily have to be born and exposed to the morbidity of prematurity depending on the age of gestation. One option is a delayed-interval delivery with reduction of morbidity and mortality for the second twin, considering maternal morbidity.

Methods

Retrospective study of delayed-interval deliveries in multiple pregnancies with evaluation of short-and long-term outcome from 2003 to 2020 at the Women's and Children's Hospital of the University Hospital < blinded>.

Results

In 17 cases, the delivery of the second twin could be prolonged, on average for 36 days. Pregnancies with delivery of the first twin before 22 weeks of gestation had a longer prolongation than pregnancies with delivery of the first twin after 22 weeks (53 vs. 22 days). In cases where a cerclage was placed, on average a longer prolongation interval (45 vs. 19 days) was observed. The short- and long-term follow-up of the second twin is comparable to the usual complication rate of premature birth.

Conclusion

Multiple pregnancies endangered by premature birth can be successfully prolonged for the second twin without serious maternal morbidity. If the first twin is born before 22 weeks of gestation and a cerclage is performed afterwards, a longer prolongation interval appears.

Introduction

Multiple pregnancies may mean double happiness, however there are challenging issues in pregnancy care and delivery planning. Due to the advances in reproductive medicine the number of multiple pregnancies increases [1], in 2018 by 19.2% in fresh cycles and by 12.7% in cryo cycles [2]. The majority of multiple-fetal pregnancies are dichorionic and diamniotic. Spontaneous and iatrogenic preterm births are more common in these pregnancies. 60% of all twins are born before 37 weeks of gestation (WOG), 12% between 37 and 32 WOG [3]. Premature birth is associated with a variety of complications, such as respiratory distress syndrome (RDS), sepsis, necrotizing enterocolitis (NEC), and cerebral palsy [4]. These morbidities depend significantly on the gestational age [5]. Complications in multiple pregnancies comprise premature labor, premature rupture of membranes, intrauterine growth restrictions, and

intrauterine death. Perinatal mortality in developed countries is 47 to 120 per 1,000 twin births and 93 to 203 per 1,000 triple births [6].

In cases of early preterm labor, not necessarily both twins have to be delivered at the same time, therefore minimizing morbidity due prematurity for the remaining twin. Delayed-interval delivery of the second twin was first described in 1880, with an interdelivery interval of 44 days [7]. Another case report with 35 days interval was published in 1957 [8].

In addition to a variety of single case reports, larger case studies describe protocols to delay the delivery and improve the outcome of the second twin [4, 9–14]. However, to date there is no standardized treatment protocol or guideline on this approach. In addition, it is not clear if this attempt is associated with an improvement of the long-term outcome of the second-born twin.

In the present study, the delayed-interval deliveries of 16 twin and one triplet pregnancies at a level 1 perinatal center are evaluated according to prolongation interval, treatment, maternal and fetal morbidity, and mortality, as well as the outcome at the age of 2 years of the surviving children. In addition, the outcome of these children was compared to the overall outcome of premature born children at the same perinatal center from 2010 to 2015.

Methods

All pregnancies were cared for at the Division of Obstetrics of the < blinded>. The obstetric database (Viewpoint 5 for gestation documentation, SAP for overall documentation and ICD-10 coding) was searched for all multiple pregnancies from 2003 to 2020 with an interval of more than 24 hours between the delivery of the first and the last twin. In total, 17 cases (16 twin pregnancies and 1 triple pregnancy) were analyzed. We retrospectively evaluated fetal and maternal baseline characteristics of obstetric management and postpartum fetal and maternal morbidity and mortality. For all surviving twins, data of neurodevelopmental development at the age of 2 years were recorded. This follow-up examination is mandatory in Germany for all children born at risk of impaired development. For this purpose, the Bayley Scales of Infant Development (BSID) is used.

In short, BSID is a standard series of measurements for the assessment of cognitive, language, motor, social-emotional development, and adaptive behavior between 1 and 42 months [15]. The result of a BSID test is calculated based on a comparison of the child with a normative age-appropriate sample determined by the assessment. A composite score is calculated for the cognitive scale, language, and motor skills and is interpreted as “normal” development for 115 to 85, as “below average” for < 85, and as “very below average” for < 70 [16]. For this study, we used the BSID subscales “mental development index” (MDI) and “psychomotor developmental index” (PDI). However, not all scores were evaluated for all cases due to lost to follow-up. Scores < 50 are summarized as “< 50” and not further differentiated.

To assess the outcomes in the analyzed cases, the BSID scores were compared to the overall outcome of premature born children at the same perinatal center from 2010 to 2015, differentiated by WOG.

Results

17 pregnancies with a total of 35 fetuses were included in our analysis. On average, the patients were 29.8 years old. In 10 of 17 cases, pregnancy was caused by artificial reproductive technologies (ART). In 13 of 17 cases the women were primiparous, 4 of 17 were multiparous.

Baseline characteristics

Table 1 lists fetal baseline characteristics, birth weights, prolongation intervals, and delivery modes. All twin pregnancies were dichorionic and diamniotic, while the triplets were monochorionic and diamniotic twins and a single pregnancy. However, the third twin of the triplets died intrauterine and is not further considered for analyses to simplify comparability.

Table 1
Fetal baseline characteristics (DC: dichorionic, /DA: diamniotic, MC: monochorionic, WOG: Weeks of pregnancy, VD: vaginal delivery, CS: cesarean section, ECS: emergency CS)

Case	Chronicity	WOG		Birth weight (g)		Mode of delivery		Interval
		Fet 1	Fet 2	Fet 1	Fet 2	Fet 1	Fet 2	(days)
1	DC/DA	23 + 3	23 + 6	550	575	VD	VD	3
2	DC/DA	23 + 1	24 + 0	490	600	VD	ECS	6
3	DC/DA	25 + 6	26 + 1	860	720	Forceps	CS	2
4	DC/DA	21 + 5	24 + 6	430	660	VD	CS	22
5	DC/DA	26 + 2	26 + 6	710	1,010	VD	VD	4
6	DC/DA	20 + 1	23 + 2	280	470	VD	CS	49
7	DC/DA	22 + 6	23 + 1	590	590	VD	ECS	2
8	DC/DA	18 + 3	22 + 0	230	545	VD	VD	25
9	DC/DA	20 + 6	35 + 3	412	2,495	VD	VD	101
10	DC/DA	26 + 6	27 + 0	640	1,165	VD	CS	1
11	DC/DA	19 + 2	24 + 1	n/a	480	VD	CS	35
12	DC/DA	19 + 5	30 + 2	n/a	1,370	VD	CS	51
13	DC/DA	22 + 5	34 + 5	450	2,240	VD	CS	84
14	DC/DA	23 + 1	34 + 4	540	2,530	VD	VD	79
15	MC/DA	25 + 1	25 + 2	610	700	VD	VD	1
16	DC/DA	20 + 4	24 + 5	n/a	615	VD	CS	14
17	DC/DA	17 + 4	35 + 6	n/a	2,700	VD	CS	128

Table 2
Long-term outcome of first twin according to Bayley Scales of Infant Development (WOG: Weeks of pregnancy)

Case	WOG	Birth weight (g)	MDI	PDI
3	25 + 6	860	105	106
5	26 + 2	710	98	110
10	26 + 6	640	88	80
14	23 + 1	540	61	n/a

The prolongation interval of all cases was on average 36 days. The longest interval was 128 days. In 16 of 17 cases the first twin was delivered spontaneously, one first twin by forceps. The delivery mode of the second twin was in 6 of 17 cases a vaginal delivery (VD), in 9 of 17 cases a cesarean section (CS) and in 2 of 17 cases an emergency CS had to be performed (ECS). The triplets were all delivered spontaneously (VD). The indication for delivery of the first twin was in 7 of 17 cases preterm labor and in 10 of 17 cases a premature rupture of membranes with preterm labor. The reason for delivery of the second twin was in 8 of 17 cases preterm labor, in 7 of 17 cases an incipient chorioamnionitis, in one case there was increased vaginal bleeding and in one case premature rupture of membranes.

Figure 1 compares birth weights of first and second twins. The difference (mean: 622.5 gram) is statistically significant ($p = 0.0050$, Mann-Whitney U), indicating a positive effect of prolongating the delivery of the second twins. Similarly, Fig. 2 compares gestational ages and shows as well statistically significant difference ($p = 0.0006$, Mann-Whitney U).

Treatment

There is no standardized treatment algorithm in our center in case of delayed-interval delivery in multiple pregnancies. Nevertheless, all these pregnancies were supervised by the same obstetric team and the procedure was uniform. In all cases, there was an antibiotic treatment after the first delivery, the umbilical cord of the first twin was high ligated, the placenta retained in utero. In 15 of 17 cases, a tocolysis was performed after the delivery of the first twin to place a cerclage and to apply an antenatal corticosteroid therapy (ACT). In 10 of 17 cases, a cerclage could be placed, an ACT was applied in 14 of 17 cases. The cerclage cases show a longer prolongation interval than the cases without a cerclage (see Fig. 3), however, the difference is not statistically significant ($p = 0.3904$, Mann-Whitney U).

The prolongation interval also shows differences depending on the WOG of the first twin's delivery. Pregnancies with a delivery of the first twin before 22 WOG could be extended by an average of 53.1 days, leading to survival of the second twin. In one case (Case 8), however, only a prolongation up to 22 + 0 WOG could be achieved and the second twin died postpartum.

In cases with delivery of the first twin after 22 + 0 WOG, the pregnancy could be extended by an average of 22.2 days. Figure 4 compares the prolongation intervals and shows a statistically significant difference ($p = 0.0208$, Mann-Whitney U). In 2 cases (Cases 13 and 14), a prolongation > 34 WOG could be achieved.

Maternal outcome

In 11 of 17 cases there were no serious maternal complications. In one case a T-incision of the uterus had to be performed for the delivery of the second twin. In 2 cases there was an increased bleeding, once at the delivery of the first twin, in the other case due to the CS. In these cases, a transfusion was necessary. In 2 cases a curettage after vaginal delivery of the second twin was necessary. An imminent chorioamnionitis was diagnosed in 7 cases. However, this did not lead to serious maternal morbidity or mortality in any of the cases.

Short- and long-term outcome of first twins

In 8 of 17 cases, the first twin was born before 22 + 0 WOG. These children all died peripartal. In the other 9 cases, one child died intrauterine, two children died peripartal, and one child died 2 hours postpartum. 5 of 9 children could be transferred to the neonatal intensive care unit. In 2 cases, an intraventricular cerebral hemorrhage (IVH) Grade I occurred. And in one case, an IVH Grade II with subsequent shunt surgery occurred. One child developed mild bronchopulmonary dysplasia (BPD). In two cases, the child developed a retinopathy Grade II (ROP). One child died of severe necrotizing enterocolitis (NEC). In summary, 4 first twins could be discharged into outpatient care after neonatological intensive care. Thus, the total mortality of the first twin was 76%.

For the four surviving first twins, a long-term outcome could be measured by BSID. For three children, a normal development could be observed according to the BSID mental development index (MDI) and the psychomotor developmental index (PDI).

Short- and long-term outcome of second twins

In one case (Case 8), the second twin died postpartum due to extreme prematurity. In two of the remaining 16 cases (Case 9 and 17), the child was released with the mother. One child (Case 13) was temporarily transferred, then could also be released with the mother. The total mortality was 5.8%.

Four children developed an IVH. A mild BPD was observed in eight cases, one child developed a moderately severe BPD, and one child a severe BPD. One child had a ROP Grade I, five children Grade II, and four children Grade III. An operation due to the ROP was necessary for one of these cases. No child developed a NEC.

The long-term outcome was assessed by BSID tests, like for the first twins (see Table 3). Four children could not be tested due to a birth weight > 1.500 g, two children did not yet meet the criteria for follow-up, two cases were not followed up, and one child suffers from severe BPD and could not be tested. The

remaining seven children were tested by BSID. Four children reached “normal development” scores between 85 and 115, one child < 85 (below average), and two children < 70 (very below average).

Table 3
Long-term outcome of second twin according to Bayley Scales of Infant Development

Case	WOG	Birth weight (g)	MDI	PDI
1	23 + 6	575	< 50	60
2	24 + 0	600	60	< 50
3	26 + 1	720	110	113
4	24 + 6	660	110	95
5	26 + 6	1,010	92	103
6	23 + 2	470	severe BPD	severe BPD
7	23 + 1	590	too young for assessment	too young for assessment
8	22 + 0	545	n/a	n/a
9	35 + 3	2,495	no assessment > 1,500 g	no assessment > 1,500 g
10	27 + 0	1,165	96	103
11	24 + 1	480	n/a	n/a
12	30 + 2	1,370	n/a	n/a
13	34 + 5	2,240	no assessment > 1,500 g	no assessment > 1,500 g
14	34 + 4	2,530	no assessment > 1,500 g	no assessment > 1,500 g
15	25 + 2	700	78	65
16	24 + 5	615	no assessment > 1,500 g	no assessment > 1,500 g
17	35 + 6	2,700	too young for assessment	too young for assessment

Discussion

In addition to several single case reports of successfully prolongated delayed-interval delivery in multiple pregnancies, there are few larger case series describing treatment protocols, maternal morbidity and mortality, and the short and long-term outcome of the children. In our case series, pregnancies could be extended by an average of 36 days. The longest prolongation interval was 128 days. If the first twin was delivered before 22 + 0 WOG, none of the firstborn children survived, but the prolongation interval was longer (on average 53.1 vs. 22.2 days, see Fig. 4). These results can also be found in other case series. In a series of 24 cases, the prolongation interval was on average 36 days and more than 49 days if the first twin was delivered before 22 + 0 WOG [11]. In another case series, 28 twin pregnancies and seven triplets

were evaluated. The prolongation interval was 47 days on average and a longer interval was observed as well if the first twin was delivered early [13].

In addition to the fetal benefit of the delayed-interval delivery, maternal morbidity and mortality must be considered. In our case series, a chorioamnionitis was diagnosed in seven cases. In two cases, a transfusion had to be performed after increased vaginal bleeding. Serious complications such as a hysterectomy or maternal death of did not occur. A larger cases series with 50 cases observed similar results. Eleven cases developed a chorioamnionitis and in five cases a higher blood loss occurred [14].

There is no uniform gold standard for treatment protocols for delayed-interval deliveries. Our case series ranges over a long period of time and there was no uniform treatment protocol. However, in all cases an antibiotic therapy and a high ligation of the umbilical cord were performed, and the placenta retained in utero. In almost all cases, tocolysis and antenatal corticosteroid therapy was performed after delivery of the first twin. This approach coincides with the case series in literature. In smaller case series, a uniform procedure with high ligation of the umbilical cord, antibiotics, regular laboratory, and ultrasound checks could always be carried out [17–19]. In another series of cases, amniocentesis was also performed in all cases after delivery of the first twin to exclude a chorioamnionitis [11]. In a larger prospective case series, a standardized treatment protocol was first drafted, after which all cases were treated in the same way. This allows for better comparability of results [14].

Whether a cerclage should be placed after the delivery of the first twin is controversially discussed in literature. In our collective, a cerclage was placed in 10 of 17 cases after the delivery of the first fetus. These cases show a longer prolongation interval than the cases without a cerclage (44.9 vs. 18.6 days, see Fig. 3), however, the difference is not statistically significant. Similar results are presented by a study of seven cases: If a cerclage was placed after the delivery of the first twin, no increased risk of infection and a longer prolongation interval (9 vs. 26 days) could be observed [20]. In another case series, a not significantly longer interval with cerclage is reported. However, the authors recommend a cerclage in the case of a persistent cervical dilatation after the delivery of the first twin [13]. In addition to the frequently discussed chorioamnionitis risk, a cerclage can also be protectively effective by minimizing the contact of the fetal membrane with the bacterial vaginal environment and thus enabling a longer prolongation interval [18, 20]. In our collective, 4 of 10 cases with a cerclage developed a chorioamnionitis.

Beside standardized treatment and maternal risks, benefits for the second twin must be considered. In a large comparative study, the perinatal mortality was investigated for 258 delayed-interval deliveries. When evaluating the prolongation interval, it was only possible to distinguish by weeks. The results show a reduction in mortality when the first twin was born between 22 and 23 WOG and the prolongation interval was up to 3 weeks. A longer prolongation showed no benefit. If the first twin was born after 24 WOG, there was no benefit in mortality for the second twin. An evaluation of fetal short- and long-term morbidity was not performed [10]. Another large case series with 200 delayed-interval deliveries also compares the group of the second twin with singleton fetus of the same gestational age. This showed an improvement in mortality with a prolongation of more than 2 days compared to the non-delayed group. Evaluations of

maternal and fetal morbidity are missing from the study [21]. In another case study, the short- and long-term outcomes of the children as well as a reference group to the delayed twins are examined by BSID tests. The mortality rate of the first twin (group 1) was 12 of 20 and for the second twin (group 2) 4 of 23. The mortality rate of the second twin showed no difference to the reference group (17% vs. 17%). In 74% of the first group there was an adverse outcome, in the second group in 30%. The second group and the reference group did not differ in morbidity, but in terms of sepsis rate, a higher rate was found for the second twins. Long-term outcome of the second twins showed no difference to the reference group [22].

In our collective, a short- and long-term outcome could be applied to both the first twins and the second twins. In the group of the first twins, 8 of 17 died due to a delivery before 22 WOG. 9 of 17 first twins were born after 22 WOG. Here, a BSID > 85 was shown for 3 children. The high mortality due to the extreme premature delivery of the first twin had a positive effect on the prolongation interval. Regarding the short-term outcome (first twin < 22 WOG), there was neither IVH nor NEC for the second-born twins, one case developed a severe BPD, and four cases developed a ROP. In the long-term evaluation, only one child in this group was able to conduct a BSID test (MDI: 110, PDI: 95). Considering the total collective of second-born children, two children had severe IVH, one child had a severe BPD, ten children had a ROP, and in no children had a NEC. Four children were able to conduct a BSID test with a “normal development” result. Compared to the collective of premature born children, the complication rate due to premature birth of all twins did not result in a worse outcome (see Fig. 5 and Fig. 6).

Conclusions

Premature birth is a common complication of multiple pregnancies. However, this does not always lead to delivery of both children. Delayed-interval delivery can reduce morbidity and mortality due to extreme premature birth of the second twin. In general, a standardized treatment protocol in a level 1 perinatal center is recommended for such rare cases. If possible, a cerclage should be performed after the delivery of the first twin to extend the prolongation interval. If the first twin is born before 22 WOG, a longer prolongation interval is can be expected. The outcome of the second twin depends on its gestational age but is comparable to the general complication rate of premature birth.

Declarations

Funding

No funding

Conflict of Interest

The authors declare that they have no conflict of interest

Availability of data and material (data transparency)

Not applicable

Code availability (software application or custom code)

Not applicable

Authors' contributions

BH: data acquisition, analysis, interpretation of data, drafting and revising of the manuscript, and final approval of the version to be published.

JE, LS: data acquisition, interpretation of data.

SS, WJ, FR, MD: helped to write the manuscript.

Ethics approval

There is no ethics approval required due to study design; the study was performed in accordance with the Declaration of Helsinki.

References

1. European IVF-monitoring Consortium (EIM), Wyns C, Bergh C, Calhaz-Jorge C, De Geyter C, Kupka MS et al. ART in Europe, 2016: Results generated from European registries by ESHRE. Hum Reprod Open. 2020;[3]
2. Blumenauer V, Czeromin U, Fehr D, Fiedler K, Gnoth C, Krüssel J-S, Kupka MS, Ott A, Tandler-Schneider A (2020) J Reproduktionsmed Endokrinol 17[5]:196–239 D·I·R Annual 2019 – The German IVF-Registry.
3. AWMF Leitlinie: Überwachung und Betreuung von Zwillingsschwangerschaften [Internet]. Available from: https://www.awmf.org/leitlinien/detail/ll/015-087.html
4. McDonnell BP, Martin A (2020 Jun) Delayed interval delivery of preterm multiples: experience from a large specialized twin center. J Matern Fetal Neonatal Med 25:1–7
5. Cheung KW, Seto MTY, Wang W, Lai CWS, Kilby MD, Ng EHY (2020) Effect of delayed interval delivery of remaining fetus(es) in multiple pregnancies on survival: a systematic review and meta-analysis. Am J Obstet Gynecol 222[4]:306–319.e18
6. Platt JS, Rosa C (1999 May) Delayed interval delivery in multiple gestations. Obstet Gynecol Surv 54[5]:343–348
7. Abrams RH. Double pregnancy: report of a case with thirty-five days bewteen deliveries. Br Med J. 1880;1:242
8. Carson J (1957) Twins born with an interval of forty-four days. Obstet Gynecol 9:435–438

9. Cristinelli S, Fresson J, André M, Monnier-Barbarino P (2005 Aug) Management of delayed-interval delivery in multiple gestations. Fetal Diagn Ther 20[4]:285–290
10. Oyelese Y, Ananth CV, Smulian JC, Vintzileos AM (2005) Delayed interval delivery in twin pregnancies in the United States: Impact on perinatal mortality and morbidity. Am J Obstet Gynecol. Feb;192[2]:439–44
11. Farkouh LJ, Sabin ED, Heyborne KD, Lindsay LG, Porreco RP (2000 Dec) Delayed-interval delivery: extended series from a single maternal-fetal medicine practice. Am J Obstet Gynecol 183[6]:1499–1503
12. Reinhard J, Reichenbach L, Ernst T, Reitter A, Antwerpen I, Herrmann E et al (2012 Sep) Delayed interval delivery in twin and triplet pregnancies: 6 years of experience in one perinatal center. J Perinat Med 40[5]:551–555
13. Fayad S, Bongain A, Holhfeld P, Janky E, Durand-Réville M, Ejnes L et al (2003) Delayed delivery of second twin: a multicentre study of 35 cases. Eur J Obstet Gynecol Reprod Biol. Jul 1;109[1]:16–20
14. Arabin B, van Eyck J. Delayed-interval delivery in twin and triplet pregnancies: 17 years of experience in 1 perinatal center. Am J Obstet Gynecol. 2009 Feb;200[2]:154.e1-8
15. Bayley N (2006) The Bayley scales of infant and toddler development, 3rd edn. Harcourt Assessment Inc., San Antonio
16. Del Rosario C, Slevin M, Molloy EJ, Quigley J, Nixon E (2020) How to use the Bayley Scales of Infant and Toddler Development. Arch Dis Child Educ Pract Ed. Aug 28
17. McDonnell BP, Martin A (2020 Jun) Delayed interval delivery of preterm multiples: experience from a large specialized twin center. J Matern Fetal Neonatal Med 25:1–7
18. Reinhard J, Reichenbach L, Ernst T, Reitter A, Antwerpen I, Herrmann E et al (2012 Sep) Delayed interval delivery in twin and triplet pregnancies: 6 years of experience in one perinatal center. J Perinat Med 40[5]:551–555
19. Kolben T, Fischer D, Ruehl I, Franz M, Hester A, Kolben TM et al (2019) Delayed interval delivery in multiple gestations: the Munich experience. Arch Gynecol Obstet 299[2]:339–344
20. Zhang J, Johnson CD, Hoffman M (2003) Cervical cerclage in delayed interval delivery in a multifetal pregnancy: a review of seven case series. Eur J Obstet Gynecol Reprod Biol. Jun 10;108[2]:126–30
21. Zhang J, Hamilton B, Martin J, Trumble A (2004 Aug) Delayed interval delivery and infant survival: a population-based study. Am J Obstet Gynecol 191[2]:470–476
22. Rosbergen M, Vogt HP, Baerts W, van Eyck J, Arabin B, van Nimwegen-Hamberg JMM et al (2005) Long-term and short-term outcome after delayed-interval delivery in multi-fetal pregnancies. Eur J Obstet Gynecol Reprod Biol. Sep 1;122[1]:66–72

Figures

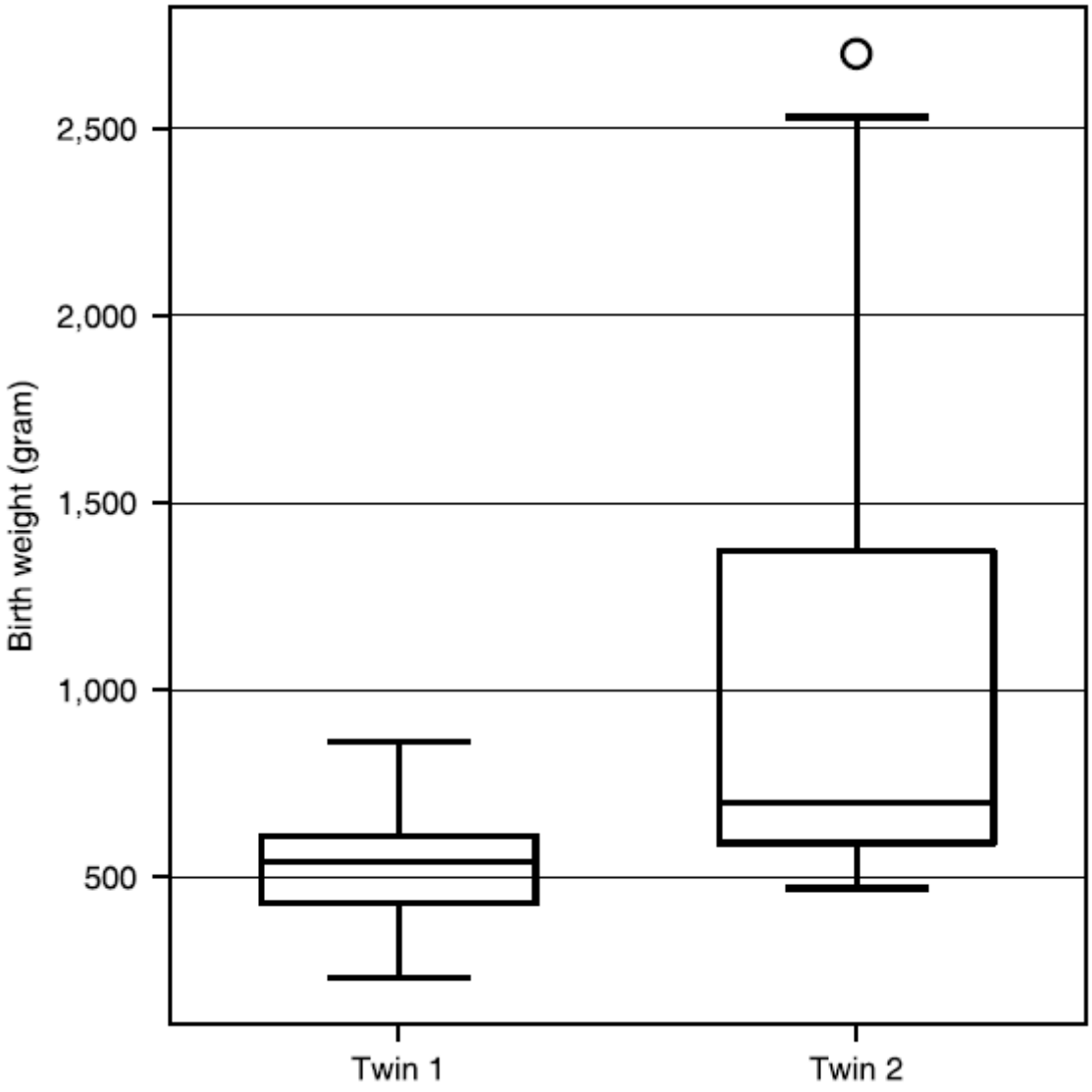

Figure 1

Comparison of birth weights of first and second twin (mean twin 1: 522.5 gram, mean twin 2: 1,145.0 gram), n=17 (cases, not children), p=0.0050 (Mann-Whitney U)

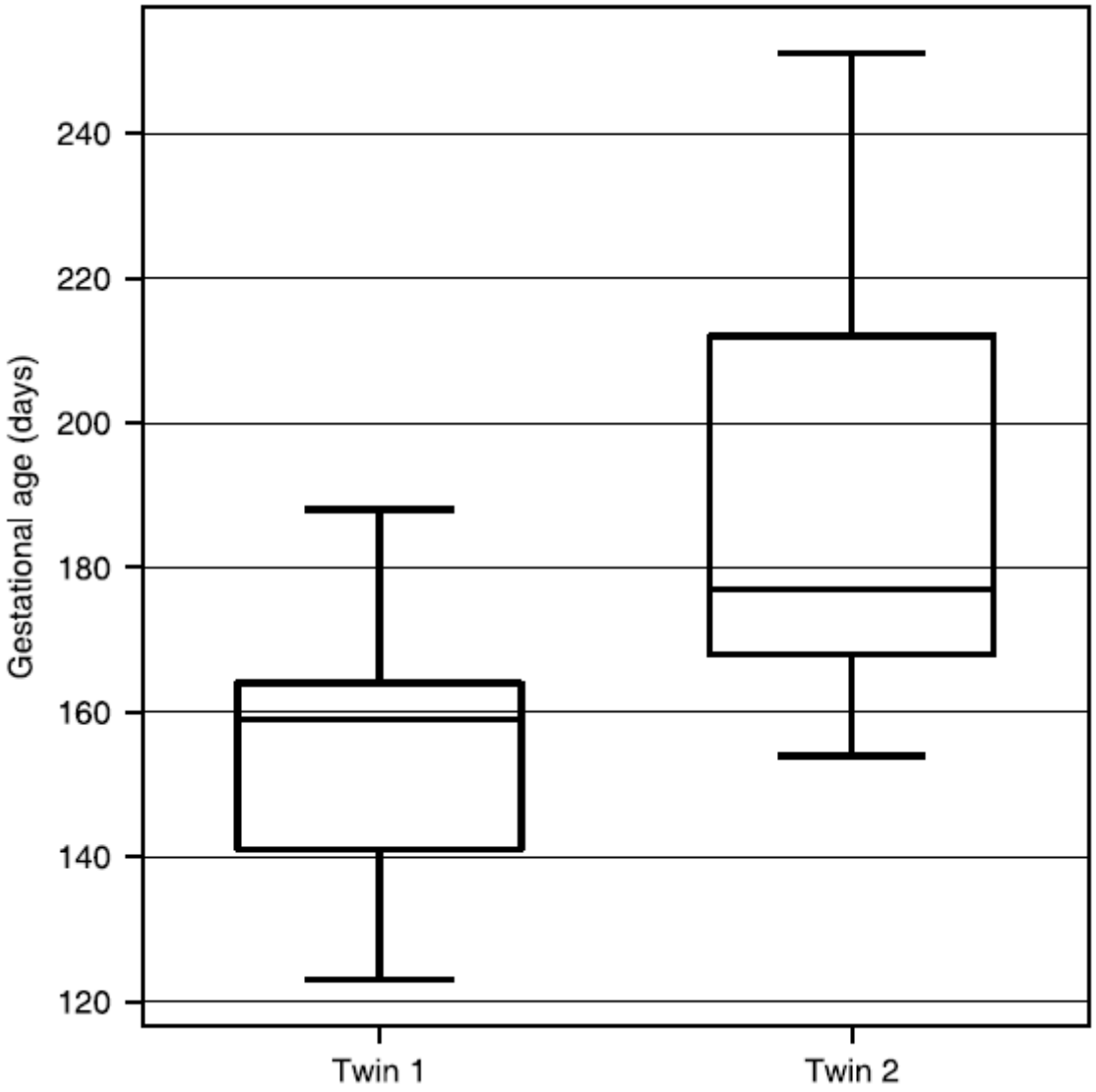

Figure 2

Comparison of gestational ages of first and second twin (mean twin 1: 155.5 days, mean twin 2: 191.9 days), n=17 (cases, not children), p=0.0006 (Mann-Whitney U)

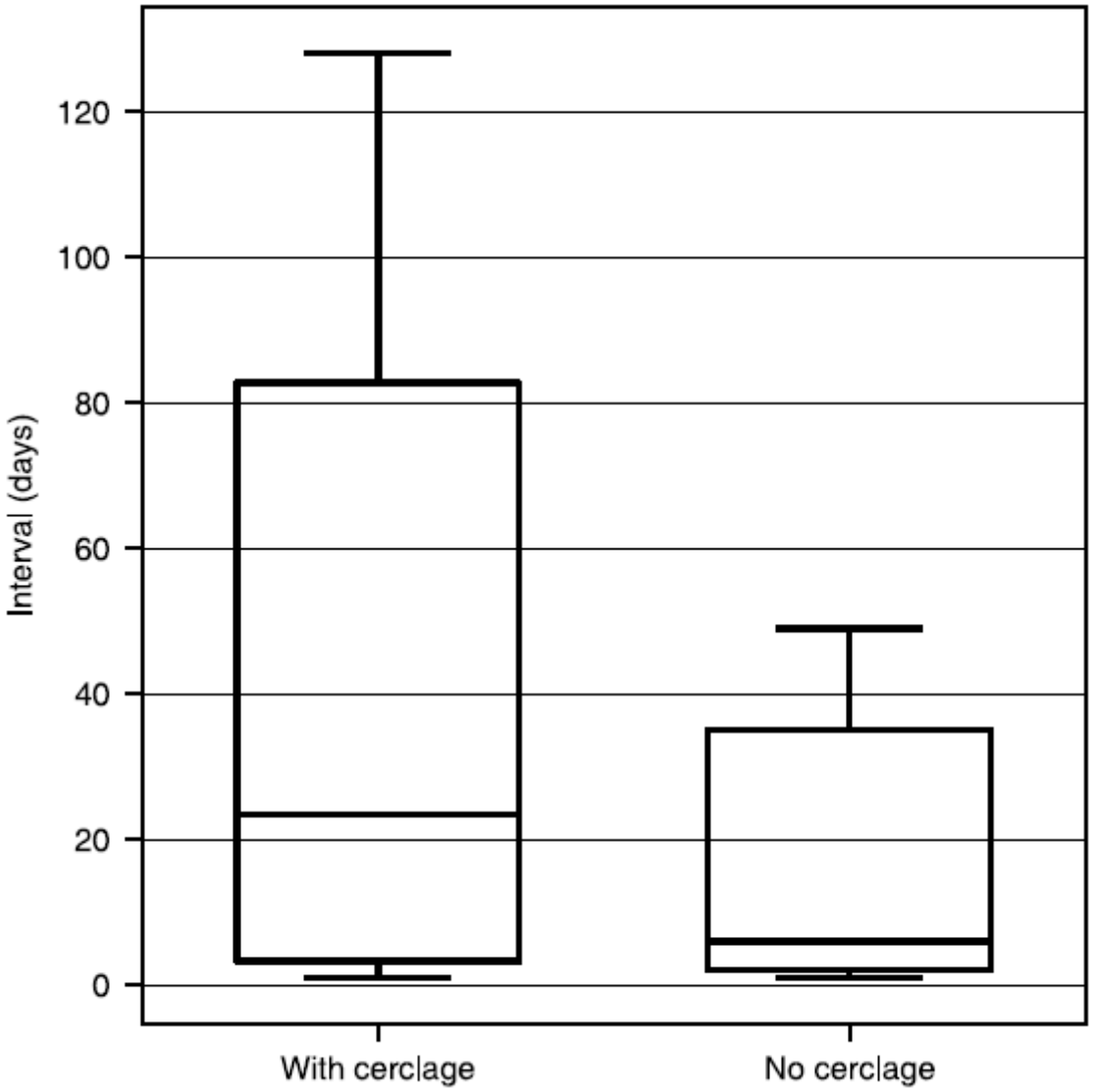

Figure 3

Prolongation interval with cerclage (mean: 44.9 days) and without cerclage (mean: 18.6 days) after delivery of first twin, n=17 (cases, not children), p=0.3904 (Mann-Whitney U)

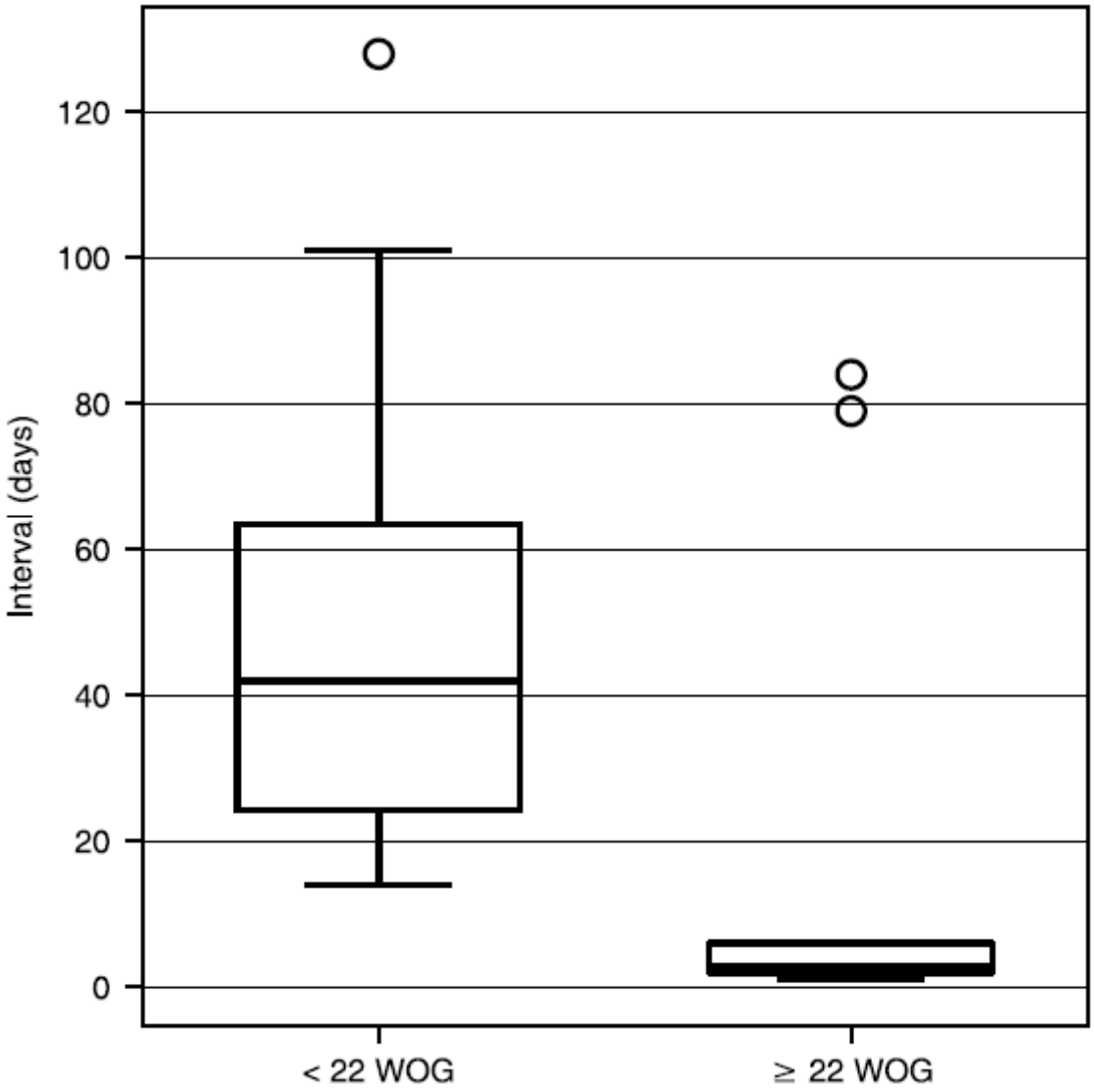

Figure 4

Prolongation intervals by delivery of the first twin before 22 weeks of gestation (WOG, mean: 53.1 days) and after 22 WOG (mean: 22.2 days), n=17 (cases, not children), p=0.0208 (Mann-Whitney U)

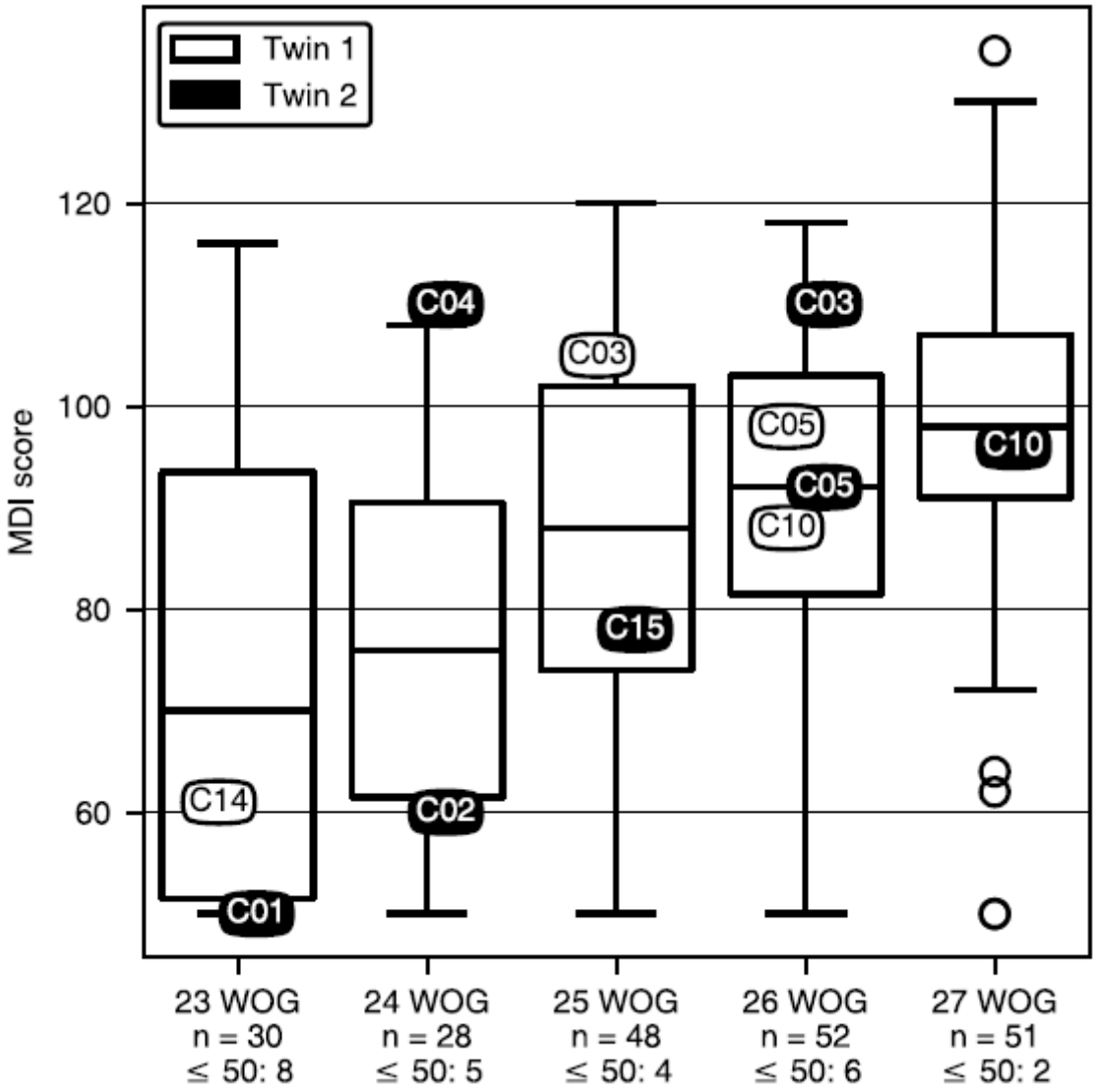

Figure 5

MDI scores of cases compared to overall MDI scores (n=433, 2010-2015, scores ≤ 50 mapped to 50)

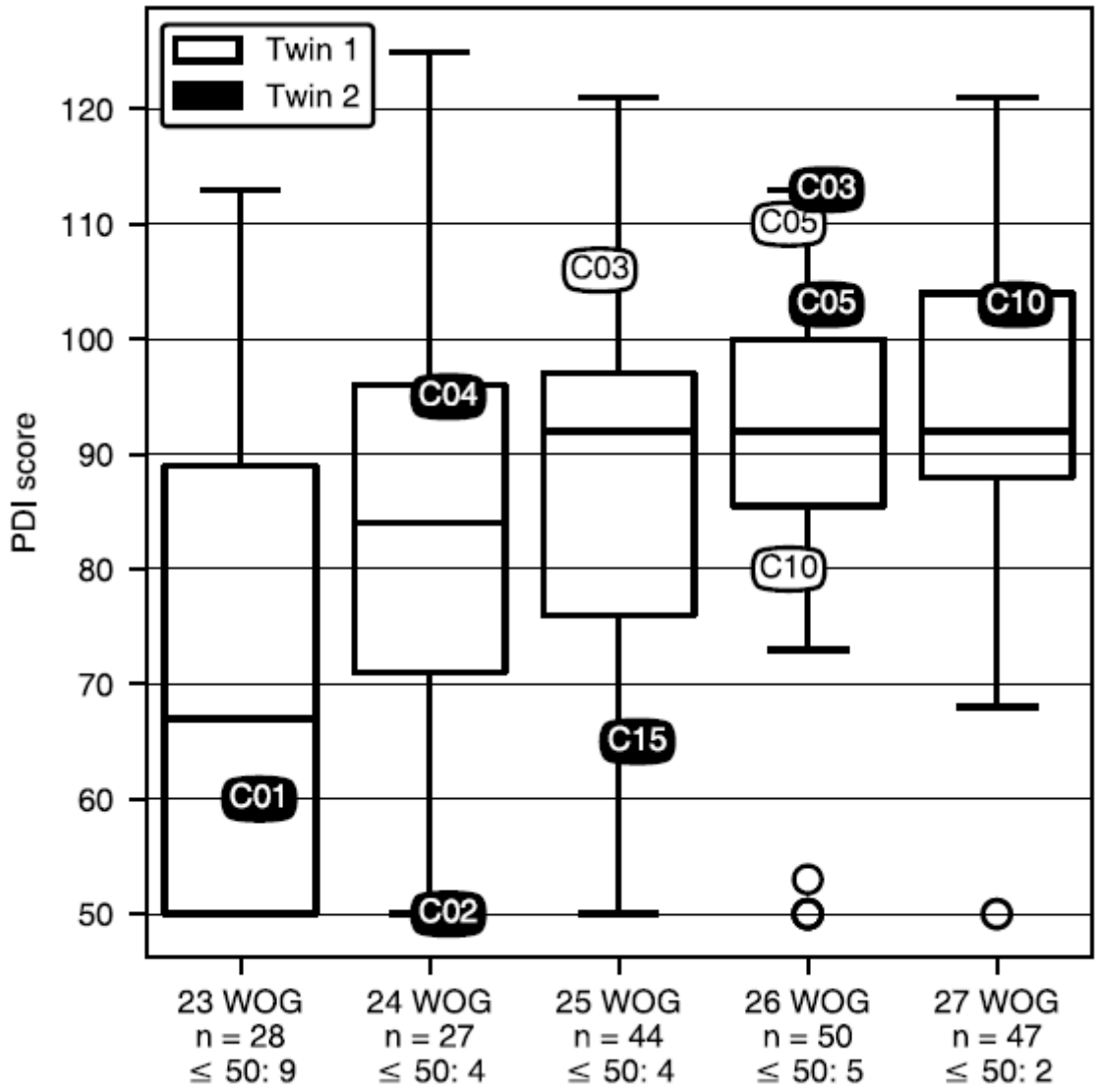

Figure 6

PDI scores of cases compared to overall PDI scores (n=422, 2010-2015, scores ≤ 50 mapped to 50)