The mediation role of religiosity and hope for the effect of self-stigma on psychological well-being among Virus Corona (COVID-19) patients

Nawal AlEid
Princess Nourah bint Abdulrahman University

Boshra A. Arnout (prof.arnout74@gmail.com)
King Khalid University https://orcid.org/0000-0003-3418-5667

Mohammed M. J. Alqahtani
King Khalid University

Fahmi H. Fadhel
King Khalid University

Research Article

Keywords: religiosity, hope, stigma, well-being, COVID-19 patients, education level, social status, income, structural equation modeling.

Posted Date: August 28th, 2020

DOI: https://doi.org/10.21203/rs.3.rs-65310/v1

Abstract

Background:

Over the past few months, there is a significant increase in mortality and morbidity due to Coronavirus disease (Kar, Yasir Arafat, Kabir, Sharma, & Saxena, 2020). Less attention has been paid by researchers to the COVID-19 pandemic, stigmatism, psychological well-being, hope and religiosity and, and how these may impact on the patient's recovery.

Method:

A random sample consisted of 426 COVID-19 patients, who have resided in the Kingdom of Saudi Arabia, they answered an online questionnaire contains four scales (Religiosity, hope, stigma, and well-being). The data collected from the study participants were analyzed quantitatively by using One-way ANOVA, Exploratory Factor Analysis EFA, Confirmatory Factor Analysis CFA, and Structural Equation Model (IBM SPSS statistics 21 and Amos v.25).

Results:

The results showed that there are statistical significant differences due to age in hope and well-being, in favor of the sample members belonging to the age group from 30 years old and over old, while there are no differences in religiosity and stigma due to age. As well as, there are no differences due to the education level in religiosity, hope, stigma and well-being. About the differences due to social status, there are statistical significant differences in well-being in favor of married group, while there are no differences in religiosity, hope and stigma due to social status. About the effect of income level in the study variables, the results showed that there are no differences due to income level in religiosity, hope, stigma and well-being. Moreover, the findings found that both religiosity and hope play an mediating role in the relationship between the latent variables stigma and psychological well-being.

Conclusions:

Religiosity and hope play a mediating role in the relationship between stigma associated with COVID-19 and psychological well-being. These results indicate a number of potential strategies to reduce the negative effects of the stigma associated with COVID-19 and to increase the level of psychological well-being among COVID-19 patients.

Introduction

Theoretical Background Review:

Coronavirus disease (COVID-19) is a new strain that was discovered in 2019 and has not been previously identified in humans. On 11 March 2020, the Director-General of WHO declared the spate of infections caused by SARS-CoV-2 (COVID-19) a pandemic (Arnout, 2020; Arnout etal, 2020). Algarni and colleagues (2017) found that few health nurses refused to care for their COVID-19 patients and preferred to stay away from them for fear of contracting the virus. While Khalid and his colleagues (2016) found that the ethical commitment of health workers led to them continuing to work with patients, and the main feelings were focused on fear for their personal safety and the well-being of their colleagues in the medical staff and their families. Positive attitudes in the workplace, the actual improvement of injured health workers, and the interruption of the Middle East Respiratory Syndrome virus among health care workers after the adoption of strict preventive measures, alleviated their fear and prompted them to face the epidemic.

Because of Corona Virus widespread over the worldwide, religiosity for many individuals is very important aspects of their health status and psychological immunity. King (2007) told that that spirituality plays a vital role in all the steps of health care, especially its management, treatment and healing. Arnout (2012) stated that hope is important for those who suffer from chronic diseases regardless of their proximity to death, and that it has a positive impact on encouraging patients to plan, make decisions and take responsibility for a better future. Without hope, life is difficult and even impossible. Therefore, hope is a very important factor in the mental health of individuals, especially COVID-19 patients who suffer from stresses that have serious consequences for the patients' well-being.

Regarding stigma, Brohan etal., (2010) suggested that self-stigma is a form of delinquency that leads others to judge an individual as ineligible to participate in social interaction. This occurs because of the belief that the individual lack the capabilities and skills to conduct such a reaction, and are also influenced by judgments relating to a person's seriousness and unpredictability of his behavior. Once considered ineligible, they override the norms of normal social behavior and the others can either ignore or exclude them.

As a result of the self-stigmatization of COVID-19 patients that they are incompetent in carrying out their family, social and career roles, this may affect their psychological well-being. Thus, the investigation of the role that mediating variables play to relief the effect of self-stigma among COVID-19 patients on their psychological well-being is very important.

1.1 Religiosity and psychological well-being:

Dein and his colleagues (2020) refereed that some major life crises affect people psychologically, socially, and physically, as well as religiously and spiritually. There is no doubt that religiosity affects the psychological well-being and mental health, which in turn affects the physical health of individuals and their ability to cope with epidemic infectious diseases, such as COVID-19.

Despite the many writings on the importance of evaluation and intervention related to the patient's religious needs, there is as yet little understanding of the effect of religiosity on the care provided by health personnel to patients (Bjarnason, 2007). The number of papers studying the relationship between

religion and health in psychosocial and behavioral sciences has increased significantly (Chatters, 2000; Alqahtani et. al. 2018).

The previous studies in this area showed the role of religion in health consequences (Alqahtani & Salmon, 2008). The study that conducted by Seeman etal (2003) argued that religiosity is linked to health-related physiological processes such as cardiovascular, neuroendocrine, and immune function. In the same context, Hill et al (2006) findings show that regular religious attendance related to a wide range of healthy behaviors, such as preventive care use, vitamin use, infrequent bar attendance, seat belt use, walking, strenuous exercise, sound sleep quality, never smoking, and moderate drinking. Similarly, in their study Park et al (2009) found that daily spiritual experiences were related to greater performance of health behaviors, while the religious struggle was related to less. As well as, AlEid etal (2020) emphasized that religiosity is a predictor of breast cancers' well-being.

1.1 Hope and psychological well-being:

Arslan (2016) said that the current century is considered the era of positive psychology and the study of positive features of individual's personality. Hope is one of the most important concepts in this field, it can facilitate to promote psychological health of individuals. Hope differs from optimism which related to an individual's future or individual's competencies to achieve aims (Snyder et al., 1991). Rather, the hope is the components for future expectations, and these components are based mainly on how an individual understands the world, instead of an assessment of their competencies (Trzebiński, Cabański, & Czarnecka, 2020).

Snyder and his colleagues (1991) asserted that hope is a public perception that elicits general responses and that it is constant over time. While, Jamie (2011) indicated that there are two types of hope: the first is the hope for wish, which is the goal directed without a personal sense of responsibility. However, the second type is hope for intent, a goal that relies on a strong sense of responsibility towards achieving the desired goal. From the above, we can say that, hope is a rational process that stems from the mind, expertise and spiritual as well as the process depends on the relationship with the other.

According to Snyder's hope theory (Snyder et al., 1991), the hope is a positive motivational component that is based on sense of successful agency and pathways, which are two interrelated cognitive dimensions: (1) Agency determination (goal-directed energy) which related to the person's motivation to maintain the paths toward goals, and (2) pathway thoughts determination (planning to meet goals) which related to the person perceived ability to create paths toward accomplished or meet a favorite goal (Snyder, Rand, & Sigmon, 2002). These two components of hope might be seen as a positive motivational state that enables individuals to continue towards their ultimate goals (Long, Kim, Chen, Wilson, Worthington, & VanderWeele, 2020).

By reviewing the theoretical literature on hope, we found that Seligman mentioned that hope is a key component of a person's normal life, and he stressed the importance of the relationship between hope and well-being. As well as, he saw that hope belongs to the positive emotions that have a relationship

with the future of the individual, and these emotions are one of the basic components of happiness and well-being. Therefore, hope is a living experience which means that the person who enjoys this experience is moving towards the future, and that his efforts are mobilized in order to transcend the present and contribute effectively to making a better future. That is why the theory of hope assumes that those with high hope can form new paths to their desired aims when they face obstacles and stress in their lives.

From the above, we noted that hope is very important for all individuals who face stresses, such as patients to adapt with their disease. Several studies have found that hope has strong positive relations with a variety of psychological outcomes such as emotional adjustment and quality of life (Stoyles, Chadwick, & Caputi, 2015). In the same context, the results of the Foote etal (1990) study indicated a relationship between hope, social support and self-esteem in patients. In the same context, Affleck & Tennen, (1996) showed that patients with high hope showed high levels of acceptance disease and psychological pain. Change (1998) study also showed a relationship between hope and quality of life for university students. Also, Staton et al (2002) showed that the higher levels of hope in the Cancer patients predict the ability to adapt and accept the disease in the first year of diagnosis, as hope allows patients with breast cancer to express their feelings and effective confrontation and thus higher levels of compatibility more than cancer patients with low levels of hope. About the relation between hope and quality of life, the results of the Brown (2005) study showed an association between hope and quality of life in elderly cancer patients. As for, the Sigstad et al (2005) study, it indicated the mediating role of hope in alleviating the impact of HIV stress on the quality of their lives. Also, The Yadav (2010) study showed a positive relationship between hope and quality of life for AIDS patients. In (2013), Arnout' study showed that hope is a statistical predictor of the concept of self and quality of life among patients with kidney failure.

Resent, study about the role of hope in shaping psychological health and well-being during COVID-19, recommended to pay more attention to hope for improvement psychological health during the times of crisis (Yildirim & Arslan, 2020). Another study, indicate that the strong level of hope correlates with the lower level of anxiety and lower COVID-19 stress, and that hope act as a buffer in the face of the anxiety and the stress reactions to the virus pandemic (Trzebiński et al., 2020). In the study of Shakespeare-Finch et. al (2020), they outlined the potential role the psychological risk that could arise from the lockdown or physical distancing of COVID-19. They recommended providing that psychological skills which could increase hopefulness during this difficult time. As well as, in that work of Bloch-Atefı et al (2020) reported that COVID-19 pandemic has made it clear that psychological services are needed more than ever, and suggested to provide the clients with positive expectation and aiding them with constructing hope that makes sense for them and that could be greatly helpful in making this difficult time more manageable.

1.2 Self-stigma and psychological well-being:

One of the first definitions of stigma is the definition of Gofman (1963, p. 5), which holds that stigma is a description that deeply afflicts and distorts the individual, and it is a bad feeling that sticks to the

individual and stands as an impediment to the life of the individual an incomplete social life. However, Vanden Boss (2007, p. 894) defined self- stigma as a negative social attitude that relates to the characteristics of the individual, which can be considered mental, physical, or social deficiencies. While Livingston (2012) believed that self-stigma is a subjective process characterized by negative feelings towards the self, non-adaptive behavior, a shift in identity, and results from an individual's experiences or perceptions or anticipating negative social reactions. In addition, Werner & Shulman (2013) mentioned that self-stigma is a concept that refers to a set of countermeasures, stereotypes, discriminatory behaviors, and biased social groupings endorsed by a large group towards another subgroup. Boyle (2013) mentioned that, as a result of self-stigmatized individuals subjected to discrimination and racism from others in their society. As for, Wu, Chang, Chen, Wang & Lin (2015), they see self-stigma as a transformative process in which a person loses their original or desired identity and adopts a low stigmatized view of themselves. Recently, Garg & Raj (2019) added that, self-stigma is the negative feelings and behaviors that dominate the individual, while endorsing stereotypes that are the result of experiences, perceptions and negative societal reactions. From the above, COVID-19 patients' self-stigma occurs when members of a stigmatized group incorporate negative views of themselves, as a result of their sense of humiliation and isolation from others. Stigma also can be defined as "an attribute linking a person to a set of undesirable characteristics that may lead to prejudice and discrimination. Infectious diseases are considered stigmatizing" (Rheingold, & Krishnan, 2020). Or as "a mark of disgrace that distinguishes a person from others" (Pescosolido, 2013). It has many negative effects that prevent healing the disease, such as feeling shame and embarrassment (Corrigan etal., 20016; Giorgi etal., 2019).

According to Werner & Shulman (2013) there are three types of stigma: *Public stigma*: It is the most well-known species and some call it the stigma of the group, and the focus is on the general attitudes and the attitudes of society towards persons subject to stigma. *Self-stigma*: The focus on this type is about assimilating and integrating individuals with negative societal views of themselves. *Family stigma*: This type refers to the stigma experienced by the individual as a result of his association with relatives who suffer stigma. While, Brohan, Slade, Clement & Thornicroft (2010) divided stigma into three types that as following: *Extreme hatred of the body*: as in the case of physical disability or apparent deformity, for example. *Defects of an individual nature*: such as mental illness or criminal conviction. *Tribe stigma*: includes race, gender, and age.

Verhaeghe, Brache, & Bruynooghe (2007) mentioned that stigma, including three dimensions, that are: *Stigma expectations*: They represent perceptions of negative attitudes towards people with psychological problems in society in general and the rejection of their behavior. *Social rejection experiences*: that is, rejecting the environment surrounding the individual as a direct result of joining a care institution, for example. And *Self-rejection experiences*: This means that a person feels shame and inferiority as a direct result of joining a care institution, for example.

From the above, we can draw that, COVID-19 patient's self-stigma is entirely related to access to the social, political, and economic power that allows to define different, build stereotypes, separate persons stigmatized into distinct categories, and fully implement denunciation, rejection, exclusion, and

discrimination. Boyle (2013) found that Self-stigma associated with increased rate of mental problems, anxiety, depression, and poor health in general. As well as, Kato, Takada, & Hashimoto (2014) indicated that self-stigma has a negative impact on individuals, as it leads to a decrease in self-esteem, self-efficacy, life satisfaction, social adjustment, overall well-being, and social contact. Stigma is associated with fear of social discrimination, and often chases certain people or groups because of its association with the place and time of the disease. Stigma is a reason for isolating stigmatized persons and their fear of exposure to the past or racial discrimination. Studies have shown that stigma and a sense of shame negatively affect the progress of treatment and medical intervention with patients, including COVID-19 patients, as happened previously with other patients such as HIV (International Labour Organization, 2020), Ebola and the Middle East Respiratory Syndrome. According to UNICEF (2020) "Social stigma in the context of health is the negative association between a person or group of people who share certain characteristics and a specific disease. In an outbreak, this may mean people are labelled, stereotyped, discriminated against, treated separately, and/or experience loss of status because of a perceived link with a disease". The COVID-19 outbreak resulted in social stigma and discriminatory behaviors against people of certain races and against anyone who was infected with the virus.

Thus, we can define COVID-19 patients' self-stigma as perceived negative traits or as a process of integrating COVID-19 patients to negative views and beliefs that would adversely affect their behaviors, include: awareness of social discrimination, the incorporation of stigma, and avoiding situations capable of provoking him. Breast cancer self-stigma results in a lack of self-efficacy and social skills, with a loss of the original identity and its replacement with a new socially unacceptable identity that isolates them from society and strengthens the idea of social rejection, as well as a feeling of psychological insufficiency.

The degree of stigma associated with COVID-19 disease depends on some factors:(1) It is a new disease and there is still a lot of unknown information; (2) We are often afraid of the unknown; (3) It is easy to link this fear to "others". Understandably, there is confusion, anxiety, and fear among the audience. Unfortunately, these factors fueling harmful stereotypes (Crandall, 1991; Lee et al., 2005; UNICEF, 2020). Also, studies found that the quarantine and strict tracking of infected cases by health authorities may cause society to reject these measures, and the spread of discrimination and social stigma among people (Shigemura etal, 2020; Brooks et al., 2020). Studies also have shown that during an outbreak of epidemic diseases, which put severe stress on public health services, some people who are more likely to be at risk of stigma and discrimination will need special medical concerns (Markel, 1997; Centers for Disease Control and Prevention, 1993; Person et al., 2004). During the outbreak of the SARS virus, some people became fearful and suspicious of all individuals who seemed Asian, regardless of their nationality or the actual risk factors for the disease (Person et al., 2004).

Person et al., (2004) indicated that "Persons who are feared and stigmatized may delay seeking care and remain in the community undetected". Stigmatization associated with discrimination often has social and economic ramifications that intensify internalized stigmatization and feelings of fear. In the same context, Lee an and colleagues (2005) show that "stigma affected most residents and took various

forms of being shunned, insulted, marginalized, and rejected in the domains of work, interpersonal relationships, use of services and schooling. Stigma was also associated with psychosomatic distress". James and colleagues (James etal., 2020) found a high level of internalised stigma (0.92 ± 0.77) Compared to total enacted stigma that came relatively low (0.71 ± 0.61) among Ebola survivors in Sierra Leone. Religiosity, perceived health status and region were the independent predictors of stigma. After check the results of number of studies (Santarelli et al., 2019; Ramaci, Pellerone, & Iacolino, 2016; Ramaci et al., 2020) about stigma among patients, we can summarized these results as:

1. Stigma can dramatically increase the suffering of people infected with the disease caused by the virus.
2. It may lead to the failure to seek health care services by people who are sick with or at risk of infection, which increases the difficulties for health authorities to control the disease.
3. Stigmatization of health professionals and health care professionals may lead to high rates of stress and fatigue, and consequently their inability to provide medical services of the required quality.

As a result of these negative effects that self-stigma has on the personality of COVID-19 patients, which may disrupt their awareness of reality and distort their way of thinking, and attack them many psychological disorders.

1.4 COVID-19 patients' well-being:

The Kingdom of Saudi Arabia is considered the most Arab country in which the COVID-19 spread, with estimates that reached in May 20-2020 to approximately 154,233 cases, of which 98,917 recovered, while the total mortality of the virus reached 1230 cases (Ministry of Health, 2020). Confirmed cases of the COVID-19 may experience fear of severe disease consequences (Xiang et al., 2020; Li et al., 2020). As a result, their psychological well-being is affected because they may suffer from anxiety, insomnia, denial, loneliness and depression, which may reduce their benefit from COVID's medical treatment. Also, some of these conditions may increase the risk of suicide. In addition, isolated cases may suffer from anxiety due to uncertainty about their health condition and the development of symptoms of OCD, such as temperature checks and frequent sterilization (Li et al., 2020).

2. The current study:

From the above, it is worth to noted that, the literature has scarce information on the importance of the median role of hope for the effect of self-stigma on psychological well-being among COVID-19 patients. There is a lack of studies which interested in studying the modified role of hope in relief the effect of stigma on psychological well-being in patients with COVID-19. Thus we need to shed light on the nature of the relationship between the self-stigma among COVID-19 patients and their psychological well-being, and detect the role that religiosity and hope can play in relief the negative effect of self-stigma on COVID-19 patients' well-being. Therefore, in the present study, we assumed that religiosity and hope can play a median role in the relation between stigma related to COVID-19 and psychological well-being.

Methods

3.1. Participants

A random sample consisted of 426 COVID-19 patients, who have resided in the Kingdom of Saudi Arabia. The study sample were choice from different age, social status, education level, and income level. A total of 11.0% (N= 47) were less than 30 years old, 61.2% (N= 262) between 30-50 years old, and 27.5% (N= 117) were over than 50 years old. While the distribution of the sample at the level of education in three levels, a total of 28.9% (N=123) less than university education level, 59.6% (N=254) university graduates, and 11.5% (N=49) were postgraduate. Out of 79.1% (N =337) were married, 14.1% (N= 60) was un married, 4.9% (N=21) were divorced, and 1.9% (N=8) widower. The sample was distributed over four income levels, a total of 44.6 (N=190) less than 10 thousand SAR, 44.1% (N=188) between 10-20 thousand SAR, 8.0% (N=34) between 20-30 thousand SAR, and 3.3% (N=14) mor than 30 thousand SAR.

3.2. Procedures

This study was applied a cross- sectional descriptive method to detect the differences in religiosity, hope, stigma and well-being due to age, educational level, social status, and income variables among COVID-19 patients in Saudi Arabia. As well as revealing the direct and indirect effects among religiosity, hope, stigma and well-being. The online questionnaire (contain self-report scales of religiosity, hope, stigma, and psychological well-being) sent to the study sample. All of these participants were agreed to participate in this study after they informed about the aims of this study, they indicating their agreement by online consent form.

3.3. Instruments

COVID-19 Patients' Religiosity Scale (CPRS-9):

In this study, the researchers prepared the self- report COVID-19 patients' religiosity scale, which consisted of 9 items. The participate responds with a 5-point Likert scale (fully agree = 5 to not fully agree = 1). The correlations between CPRS-9 and the total score of the scale were calculated, and the correlation coefficients ranged from 0.400 to 0.813 and were statistically significant at 0.01 level (2-tailed). As well as, Cronbach's Alpha for the CPRS-9 was .761, the Spearman-Brown Coefficient for unequal length was .688. These results indicated that the CPRS-9 is validated and reliable.

Exploratory Factor Analysis (EFA) the Principle Components Analysis (PCA) method was used to derive CPRS-9 factors. EFA produced two factors that accounted for (62.283%) of the total variance of the scale. The results showed in table (1).

Table 1. Rotated Component Matrix[a]

	Component	
	1	2
R1		.791
R2	.877	
R3		.733
R4		.735
R5		.776
R6	.684	
R7	.598	
R8	.729	
R9	.739	
Total of Variance	34.030	28.253

To validate the religiosity factors, Confirmatory Factor Analysis CFA was used. The results showed that there are appropriate goodness fit indexes (CMIN/DF=3.652; NFI= .808; CFI= .849; RMSEA= .05), all of which indicated that the religiosity standards proposed model is acceptable. All of the religiosity observed variables had statistically significant ($p < .001$) loadings on the respective latent variables (see figure 1).

COVID-19 Patients' Hope Scale (CPHS-8):

The researchers prepared the COVID-19 patients' hope scale, which consisted of 8 items. The participate responds with a 5-point Likert scale (fully agree = 5 to not fully agree = 1). The correlations between CPHS-8 and the total score of the scale were calculated and the correlation coefficients ranged between 0.429 and 0.659 with significant at 0.01 level (2-tailed). As well as, Cronbach's Alpha for the CPHS-9 was .639, the Spearman-Brown Coefficient for unequal length was .430. These results indicated that the CPHS-9 is validated and reliable.

Exploratory Factor Analysis (EFA) the Principle Components Analysis (PCA) method was used to derive CSHS-8 factors. EFA produced two factors that accounted for (53.886%) of the total variance of the scale. The results showed in tables (2).

Table 2. Rotated Component Matrix[a]

	Component	
	1	2
H1	.478	
H2		.734
H3		.747
H4		.549
H5	.722	
H6	.726	
H7	.895	
H8	.874	
Total of Variance	36.120	17.766

Extraction Method: Principal Component Analysis.

Rotation Method: Varimax with Kaiser Normalization

To validate the hope factors, Confirmatory Factor Analysis CFA was used. The results showed that there are appropriate goodness fit indexes (CMIN/DF=2.360; NFI= .860; CFI= .878; RMSEA= .053), all of which indicated that the hope standards proposed model is acceptable. All of the hope observed variables had statistically significant ($p < .001$) loadings on the respective latent variables (see figure 2).

COVID-19 Patients' Stigma Scale (CPSS-10):

The self- report COVID-19 patients stigma scale, which consisted of 10 items. The participate responds with a 5-point Likert scale (fully agree = 5 to not fully agree = 1). The correlations between CPSS-9 and the total score of the scale were calculated and the correlation coefficients ranged from 0.526 to 0.804 with significant at 0.01 level (2-tailed). As well as, Cronbach's Alpha for the CPSS-9 was .884, the Spearman-Brown Coefficient for unequal length was .881. These results indicated that the CPSS-19 is validated and reliable.

Exploratory Factor Analysis (EFA) the Principle Components Analysis (PCA) method was used to derive CPSS-10 factors. EFA produced two factors that accounted for (65.743%) of the total variance of the scale. The results showed in tables (3).

Table 3 Rotated Component Matrix[a]

	Component	
	1	2
S1		.804
S2		.643
S3	.776	
S4	.841	
S5	.801	
S6	.818	
S7	.806	
S8	.663	
S9		.754
S10		.546
Total of Variance	42.851	22.892

Extraction Method: Principal Component Analysis.

Rotation Method: Varimax with Kaiser Normalization

Confirmatory Factor Analysis CFA was used to validate the stigma factors. The results showed that there are appropriate goodness fit indexes (CMIN/DF=3.281; NFI= .789; CFI= .832; RMSEA= .049), all of which indicated that the stigma standards proposed model is acceptable. All of the hope observed variables had statistically significant ($p < .001$) loadings on the respective latent variables (see figure 3).

COVID-19 Patients' Well-being Scale (CPWS-10):

The researchers prepared the self- report COVID-19 patients well-being scale, which consisted of 10 items. The participate responds with a 5-point Likert scale (fully agree = 5 to not fully agree = 1). The correlations between CPWS-9 and the total score of the scale were calculated and the correlation coefficients ranged from 0.524 to 0.718 with significant at 0.01 level (2-tailed). As well as, Cronbach's Alpha for the CPWS-9 was .809, the Spearman-Brown Coefficient for unequal length was .790. These results indicated that the CPWS-10 is validated and reliable.

Exploratory Factor Analysis (EFA) the Principle Components Analysis (PCA) method was used to derive CSWS-10 factors. EFA produced three factors that accounted for (60.386%) of the total variance of the scale. The results showed in tables (4).

Table 4 Rotated Component Matrix[a]

	Component		
	1	2	3
W1			.313
W2			.813
W3	.783		
W4	.757		
W5		.431	
W6		.839	
W7		.719	
W8		.471	
W9			.745
W10	.813		
Total of Variance	22.236	19.269	18.858

Extraction Method: Principal Component Analysis.

Rotation Method: Varimax with Kaiser Normalization.

Confirmatory Factor Analysis CFA was used to validate the well-being factors. The results showed that there are appropriate goodness fit indexes (CMIN/DF=1.671; NFI= .822; CFI= .920; RMSEA= .054), all of which indicated that the well-being standards proposed model is acceptable. All of the hope observed variables had statistically significant ($p < .001$) loadings on the respective latent variables (see figure 4).

3.4. Data Analysis:

The data collected from the study participants were analyzed quantitatively. One-way ANOVA calculated to reveal the differences in the study variables due to age, level of education, marital status, and income level variables (IBM SPSS statistics 21). Exploratory Factor Analysis EFA uses to extract the factors of each scales prepared in this study, and then using Confirmatory Factor Analysis CFA to validate this factor (IBM SPSS Amos 25). The Structural Equation Model was used to test the direct and indirect effects between study variables, as well as to validate the mediating role of religiosity and hope in the relationship between the stigma associated with COVID-19 and psychological well-being.

Results

4.1. The results about the differences in religiosity, hope, stigma and well-being due to age: one-way ANOVA calculated to detect the differences in the religiosity, hope, stigma and well-being. The findings shown in tables (5, 6, 7).

Table 5 Descriptive

		N	Mean	Std. Deviation	Std. Error
Religiosity	1	47	43.5319	2.26362	.33018
	2	262	43.8550	1.76870	.10927
	3	117	43.8462	1.77926	.16449
	Total	426	43.8169	1.83028	.08868
Hope	1	47	22.4894	2.74157	.39990
	2	262	23.7557	2.90486	.17946
	3	117	23.3162	2.57190	.23777
	Total	426	23.4953	2.82197	.13672
Stigma	1	47	19.8511	8.44928	1.23245
	2	262	18.6336	5.83648	.36058
	3	117	18.0171	5.67205	.52438
	Total	426	18.5986	6.13962	.29747
Well-being	1	46	40.7391	5.91208	.87169
	2	261	44.3448	4.81543	.29807
	3	117	44.2393	4.10351	.37937
	Total	424	43.9245	4.88148	.23707

Table 6 ANOVA

		Sum of Squares	df	Mean Square	F	Sig.
Religiosity	Between Groups	4.297	2	2.148	.640	.528
	Within Groups	1419.421	423	3.356		
	Total	1423.718	425			
Hope	Between Groups	69.080	2	34.540	4.407	.013
	Within Groups	3315.410	423	7.838		
	Total	3384.491	425			
Stigma	Between Groups	113.611	2	56.806	1.511	.222
	Within Groups	15906.748	423	37.605		
	Total	16020.359	425			
Well-being	Between Groups	524.451	2	262.225	11.554	.000
	Within Groups	9555.134	421	22.696		
	Total	10079.585	423			

The results showed in table 6, indicated that there are significant differences due to age in hope and well-being, while there are no differences in religiosity and stigma due to age. To determine the direction of these differences, a Scheffe test was used (see results in a table 7). As the results indicate that the differences in both hope and well-being were in the favor of the sample members belonging to the age group from 30 years old and over.

Table 7 The results of Scheffe test for the differences in religiosity, hope, stigma and well-being due to age

Dependent Variable	(I) Age	(J) Age	Mean Difference (I-J)	Std. Error	Sig.
Religiosity	1	2	-.32305-	.29018	.539
		3	-.31424-	.31635	.611
	2	1	.32305	.29018	.539
		3	.00881	.20369	.999
	3	1	.31424	.31635	.611
		2	-.00881-	.20369	.999
Hope	1	2	-1.26636-*	.44348	.018
		3	-.82688-	.48348	.233
	2	1	1.26636*	.44348	.018
		3	.43949	.31130	.370
	3	1	.82688	.48348	.233
		2	-.43949-	.31130	.370
Stigma	1	2	1.21748	.97140	.457
		3	1.83397	1.05901	.224
	2	1	-1.21748-	.97140	.457
		3	.61649	.68186	.665
	3	1	-1.83397-	1.05901	.224
		2	-.61649-	.68186	.665
Well-being	1	2	-3.60570-*	.76181	.000
		3	-3.50019-*	.82909	.000
	2	1	3.60570*	.76181	.000

		3	.10551	.53004	.980
	3	1	3.50019*	.82909	.000
		2	-.10551-	.53004	.980

4.2. The results about the differences in religiosity, hope, stigma and well-being due to education level: one-way ANOVA calculated to detect the differences in the religiosity, hope, stigma and well-being. The findings shown in tables (8, 9).

Table 8 Descriptive

		N	Mean	Std. Deviation	Std. Error
Religiosity	1	123	43.8780	1.77221	.15980
	2	254	43.8780	1.78843	.11222
	3	49	43.3469	2.13650	.30521
	Total	426	43.8169	1.83028	.08868
Hope	1	123	23.7317	2.61482	.23577
	2	254	23.4370	2.90052	.18199
	3	49	23.2041	2.92247	.41750
	Total	426	23.4953	2.82197	.13672
Stigma	1	123	18.2520	4.89160	.44106
	2	254	18.6732	5.98809	.37573
	3	49	19.0816	9.13062	1.30437
	Total	426	18.5986	6.13962	.29747
Well-being	1	123	44.3984	4.62484	.41701
	2	253	43.8933	4.62057	.29049
	3	48	42.8750	6.53835	.94373
	Total	424	43.9245	4.88148	.23707

Table 9. ANOVA

		Sum of Squares	df	Mean Square	F	Sig.
Religiosity	Between Groups	12.229	2	6.115	1.832	.161
	Within Groups	1411.489	423	3.337		
	Total	1423.718	425			
Hope	Between Groups	11.893	2	5.946	.746	.475
	Within Groups	3372.598	423	7.973		
	Total	3384.491	425			
Stigma	Between Groups	27.621	2	13.810	.365	.694
	Within Groups	15992.738	423	37.808		
	Total	16020.359	425			
Well-being	Between Groups	80.737	2	40.368	1.700	.184
	Within Groups	9998.848	421	23.750		
	Total	10079.585	423			

The results showed in table 9, indicated that there are no statistically significant differences due to education status in religiosity, hope, stigma and well-being among COVID-19 patients.

4.3. The results about the differences in religiosity, hope, stigma and well-being due to social status: one-way ANOVA calculated to detect the differences in the religiosity, hope, stigma and well-being. The findings shown in tables (10, 11, 12).

Table 10 Descriptive

		N	Mean	Std. Deviation	Std. Error
Religiosity	1	60	43.6333	2.01660	.26034
	2	337	43.8309	1.81213	.09871
	3	21	44.0952	1.78619	.38978
	4	8	43.8750	1.35620	.47949
	Total	426	43.8169	1.83028	.08868
Hope	1	60	22.7500	2.34792	.30311
	2	337	23.6409	2.91627	.15886
	3	21	22.9048	2.30010	.50192
	4	8	24.5000	2.39046	.84515
	Total	426	23.4953	2.82197	.13672
Stigma	1	60	19.4500	8.10404	1.04623
	2	337	18.3976	5.71827	.31149
	3	21	17.8571	6.31099	1.37717
	4	8	22.6250	4.83846	1.71065
	Total	426	18.5986	6.13962	.29747
Well-being	1	59	41.4068	6.15915	.80185
	2	336	44.3690	4.50878	.24597
	3	21	44.0476	4.95456	1.08117
	4	8	43.5000	4.40779	1.55839
	Total	424	43.9245	4.88148	.23707

Table 11 ANOVA

		Sum of Squares	df	Mean Square	F	Sig.
Religiosity	Between Groups	3.741	3	1.247	.371	.774
	Within Groups	1419.977	422	3.365		
	Total	1423.718	425			
Hope	Between Groups	55.876	3	18.625	2.361	.071
	Within Groups	3328.614	422	7.888		
	Total	3384.491	425			
Stigma	Between Groups	198.345	3	66.115	1.763	.153
	Within Groups	15822.015	422	37.493		
	Total	16020.359	425			
Well-being	Between Groups	442.157	3	147.386	6.423	.000
	Within Groups	9637.428	420	22.946		
	Total	10079.585	423			

The results showed in table 11, indicated that there are statistically significant differences due to social status in well-being while there are no differences in religiosity, hope and stigma among COVID-19 patients. To determine the direction of these differences, a Scheffe test was used (see results in a table 12). As the results indicate that the differences in well-being were in the favor of the sample members belonging to the married group of COVID-19 patients.

Table 12 The results of Scheffe test for the differences in religiosity, hope, stigma and well-being due to social status

Dependent Variable	(I) Social status	(J) Social status	Mean Difference (I-J)	Std. Error	Sig.
Religiosity	1	2	-.19753-	.25703	.899
		3	-.46190-	.46509	.805
		4	-.24167-	.69043	.989
	2	1	.19753	.25703	.899
		3	-.26438-	.41257	.938
		4	-.04414-	.65620	1.000
	3	1	.46190	.46509	.805
		2	.26438	.41257	.938
		4	.22024	.76213	.994
	4	1	.24167	.69043	.989
		2	.04414	.65620	1.000
		3	-.22024-	.76213	.994
Hope	1	2	-.89095-	.39353	.165
		3	-.15476-	.71209	.997
		4	-1.75000-	1.05708	.434
	2	1	.89095	.39353	.165
		3	.73619	.63167	.715
		4	-.85905-	1.00467	.866
	3	1	.15476	.71209	.997
		2	-.73619-	.63167	.715
		4	-1.59524-	1.16686	.600

	4	1	1.75000	1.05708	.434
		2	.85905	1.00467	.866
		3	1.59524	1.16686	.600
Stigma	1	2	1.05237	.85798	.681
		3	1.59286	1.55250	.789
		4	-3.17500-	2.30467	.594
	2	1	-1.05237-	.85798	.681
		3	.54048	1.37718	.985
		4	-4.22737-	2.19040	.294
	3	1	-1.59286-	1.55250	.789
		2	-.54048-	1.37718	.985
		4	-4.76786-	2.54401	.320
	4	1	3.17500	2.30467	.594
		2	4.22737	2.19040	.294
		3	4.76786	2.54401	.320
Well-being	1	2	-2.96227-*	.67617	.000
		3	-2.64084-	1.21721	.196
		4	-2.09322-	1.80477	.719
	2	1	2.96227*	.67617	.000
		3	.32143	1.07748	.993
		4	.86905	1.71364	.968
	3	1	2.64084	1.21721	.196

		2	-.32143-	1.07748	.993
		4	.54762	1.99022	.995
	4	1	2.09322	1.80477	.719
		2	-.86905-	1.71364	.968
		3	-.54762-	1.99022	.995

4.4. The results about the differences in religiosity, hope, stigma and well-being due to income level: one-way ANOVA calculated to detect the differences in the religiosity, hope, stigma and well-being among COVID-19 patients. The findings shown in tables (13, 14).

The results showed in table 14, indicated that there are no statistically significant differences due to income level in religiosity, hope, stigma and well-being among COVID-19 patients.

4.5. The results about the intermediate role of religiosity and hope variables between stigma and psychological well-being among patients of COVID-19. The researchers drew a diagram model of the relationships between the study variables (see figure 5). And to test this proposed model, the structural equation modeling was used by the Maximum Likelihood Estimation method to find out the effects of religiosity and hope on stigma and psychological well-being as intermediate variables.

Table 13 Descriptive

		N	Mean	Std. Deviation	Std. Error
Religiosity	1	190	43.7263	1.93788	.14059
	2	188	43.9681	1.69272	.12345
	3	34	43.6176	1.84251	.31599
	4	14	43.5000	2.10311	.56208
	Total	426	43.8169	1.83028	.08868
Hope	1	190	23.1947	2.65851	.19287
	2	188	23.8723	2.71944	.19834
	3	34	23.4706	3.61173	.61941
	4	14	22.5714	3.71513	.99291
	Total	426	23.4953	2.82197	.13672
Stigma	1	190	18.9421	6.34308	.46018
	2	188	18.5479	5.92311	.43199
	3	34	17.5000	6.03148	1.03439
	4	14	17.2857	6.60336	1.76482
	Total	426	18.5986	6.13962	.29747
Well-being	1	188	43.4096	5.26996	.38435
	2	188	44.1277	4.62089	.33701
	3	34	44.7941	4.14714	.71123
	4	14	46.0000	3.74166	1.00000
	Total	424	43.9245	4.88148	.23707

Table 14 ANOVA

Variables		Sum of Squares	df	Mean Square	F	Sig.
Religiosity	Between Groups	8.612	3	2.871	.856	.464
	Within Groups	1415.106	422	3.353		
	Total	1423.718	425			
Hope	Between Groups	55.861	3	18.620	2.361	.071
	Within Groups	3328.630	422	7.888		
	Total	3384.491	425			
Stigma	Between Groups	88.070	3	29.357	.778	.507
	Within Groups	15932.289	422	37.754		
	Total	16020.359	425			
Well-being	Between Groups	143.627	3	47.876	2.024	.110
	Within Groups	9935.958	420	23.657		
	Total	10079.585	423			

In order to verify the conformity of the model, the researchers used several indicators (table 15) such as Chi-square divided in Degree of Freedom CMIN/DF (2.645), which is not insignificant value, and a Goodness Fit Index GFI (.96), the Root Mean Square Error of Approximation RAMSEA (.062), which indicates that the proposed model is good and appropriate to the data. The Results showed in figure 6 indicated that all paths of the model are statistically significant.

Table 15 Fit indices of the hypothesized Model

Indicators	Values in this study	
CMIN/DF	2.645	
GFI	0.96	
RAMSEA	0.062	
NFI	0.964	
RFI	0.893	
IFI	0.965	
CFI	0.965	
AIC	**Model**	Value
	Default	122.844
	Independence	1134.839
BBC	**Model**	Value
	Default	124.338
	Independence	1135.275

Table 16 The direct effects (n=426 - default model)

	Hope	Religiosity	Stigma	Well-being
Stigma	-4.147	-.267	.000	.000
Well-being	7.236	.807	1.000	.000

The results showed in the table (16) indicated that the direct (unmediated) effect of hope on well-being is 7.236, that mean when hope goes up by 1, well-being goes up by 7.236. This is in addition to any indirect (mediated) effect that hope may have on well-being. As well as, the direct (unmediated) effect of religiosity on well-being is .807. When religiosity goes up by 1, well-being goes up by 0.807. This is in addition to any indirect (mediated) effect that religiosity may have on well-being. Also, the direct (unmediated) effect of stigma on well-being is 1.000. When stigma goes up by 1, well-being goes up by 1. This is in addition to any indirect (mediated) effect that stigma may have on well-being.

Table 17 The indirect effects (n= 426 - default model)

	Hope	Religiosity	Stigma	Well-being
Stigma	.000	.000	.000	.000
Well-being	-4.147	-.267	.000	.000

The results showed in table (17) indicated that the indirect (mediated) effect of hope on stigma is .000. When hope goes up by 1, stigma goes up by 0. This is in addition to any direct (unmediated) effect that hope may have on stigma. Also, the indirect (mediated) effect of hope on well-being is -4.147. When hope goes up by 1, well-being goes down by 4.147. This is in addition to any direct (unmediated) effect that hope may have on well-being. As well as, the indirect (mediated) effect of religiosity on stigma is .000. That means when religiosity goes up by 1, stigma goes up by 0. This is in addition to any direct (unmediated) effect that religiosity may have on stigma. Results about the indirect (mediated) effect of religiosity on well-being is -.267. That is, due to the indirect (mediated) effect of religiosity on well-being, when religiosity goes up by 1, well-being goes down by 0.267. This is in addition to any direct (unmediated) effect that religiosity may have on well-being. As well as, the indirect (mediated) effect of stigma on well-being is .000. When stigma goes up by 1, well-being goes up by 0. This is in addition to any direct (unmediated) effect that stigma may have on well-being.

Table 18 The regression weights (n= 426 - default model)

			Estimate	S.E.	C.R.	P	Label
Stigma	<---	Religiosity	-.267	.210	-1.269	.204	par_7
Stigma	<---	Hope	-4.147	.668	-6.207	***	par_8
Well-being	<---	Hope	7.236	1.136	6.370	***	par_6
Well-being	<---	Religiosity	.807	.368	2.191	.028	par_9
Well-being	<---	Stigma	-.447	.057	-7.804	***	par_8

In the table (18) results about regression, indicated that the probability of getting a critical ratio as large as 1.269 in absolute value is .204. In other words, the regression weight for religiosity in the

prediction of stigma is not significantly different from zero at the 0.05 level (two-tailed). While, the probability of getting a critical ratio as large as 6.207 in absolute value is less than 0.001. This result mean that the regression weight for hope in the prediction of stigma is significantly different from zero at the 0.001 level (two-tailed). While The probability of getting a critical ratio as large as 6.37 in absolute value is less than 0.001. In other words, the regression weight for hope in the prediction of well-being is significantly different from zero at the 0.001 level (two-tailed). As well as, the probability of getting a critical ratio as large as 2.191 in absolute value is .028. This result means that the regression weight for religiosity in the prediction of well-being is significantly different from zero at the 0.05 level (two-tailed). Findings also revealed that the probability of getting a critical ratio as large as 7.804 in absolute value is less than 0.001. In other words, the regression weight for stigma in the prediction of well-being is significantly different from zero at the 0.001 level (two-tailed).

Discussion

The current study addresses a number of important results about the effect of demographic variables on study variables: religiosity, hope, stigma, psychological well-being. The results showed that there are statistically significant differences due to age in hope and well-being. These differences in favor of the sample members belonging to the age group from 30 years old and over old. While there are no differences in religiosity and stigma due to age. As well as, the findings indicated that there are no differences due to the education level in religiosity, hope, stigma and well-being. Also, the results indicated that there are statistically significant differences due to social status in well-being in favor of the sample members belonging to married group, while there are no differences in religiosity, hope and stigma. About the effect of income level in the study variables, the results of the current study showed that there are no differences due to the income level in religiosity, hope, stigma and well-being.

The high level of religiosity of the members of the study sample increased the level of their hope and psychological well-being, as well as the nature of religious Saudi society, and the preservation of religious rituals such as prayers to God in time of crises or illness. As well as the nature of the community members supporting each other, from providing material support to the needy persons, and psychological support to patients, all this reduced the negative impact of COVID-19 infection, and reduced the stigma related to it. Moreover, we cannot deny the Kingdom's efforts in providing patients with health care and financial support to COVID-19 patients and their families to achieve the 2030 vision that aims to the quality of life for the Saudi citizen. And since, most of the sample is over 30 years old (n = 379, 89% of the total sample), this higher age group have a higher level of psychological well-being rather than the individuals less than 30 years old. Likewise, the married people was the highest proportion in the current study sample (n= 337, 79.1% of the total sample), married people have a positive attitude toward life and a high level in psychological well-being, and this result can be explained by the fact that marital life provides them with social support in times of crises and distresses, including illness. Also, marriage makes the individual feel psychological stability and social appreciation and satisfied with life. In addition to providing support to Saudi families from governmental and voluntary institutions, especially in times of crisis and disaster, as COVID-19 pandemic outbreak.

On the other hand, this study tried to reveal the mediating role that religiosity and hope play in the relationship between the stigma related to COVID-19 and psychological well-being. Structural Equation Modeling was used to investigate, at the same time, the direct and indirect effects between the variables of this study. The final structural model (see figure 6) allows for many interpretations. It was found that religiosity and hope are strong predictors of the latent psychological well-being. In light of these results, the results of the current study indicate that religiosity has a direct positive effect on the psychological well-being of patients of COVID-19, and this indicates that the greater the individual's religiosity, the greater his psychological well-being. This consisted with Zinnbauer et al. (1997) suggested that religiosity was related to higher levels of authoritarianism, parental religious attendance, religious orthodoxy, self-righteousness, and intrinsic religiousness.

The results also found that hope also has a direct positive effect on psychological well-being, given that the more a person feels hope, the greater his level of psychological well-being. These findings indicate that religiosity and hope have a positive role in improving the psychological well-being level of individuals who survived from the COVID-19 infection. The results of the current study also indicated that religiosity and hope played an intermediate role between the stigma and psychological well-being among those survived from COVID-19. James etal (2020) found high levels of stigma among Ebola survivors, stigma increase the suffering of people infected with Virus.

Rheingold & Krishnan (2020) referred, infection and disease are stigmatizing, that may has negative effects that prevent healing the disease, because stigma is related to fear of social discrimination and shame which in turn affect negatively the progress of treatment and interventions, therefore, these resulted in decrease patients' well-being, including COVID-19 patients. International Labour Organization (2020), Brooks etal (2020) and Shigemura (2020), UNICEF (2020) emphasized that affection with COVID-19 resulted social stigma and discriminatory behaviors against COVID-19 patients.

Pieper & Van Uden (2005) emphasized that religiosity is consider as shelters support individuals in their cope with life stresses, thus religiosity can decrease negative feelings and increase well-being. Pollner (1989) reported that religiosity related positively with well-being. In the same context, Ellison & Levin (1998) indicated that religiosity play an important role in well-being through many mechanisms such as: specific coping resources, healthy lifestyle, behavior regulation, positive self-perception and emotions. Levin (2001) argued that when the individual feels with loved by God, this feeling increase his health and well-being. Quintana (2013) found that religious play a mediator role in the relation between stigma of mental illness and mental health. Also, Wnuk & Marcinkowski (2014) revealed that religiosity effects on psychological wellbeing through increasing hope and meaning of life, because the religiosity make an individual feeling with happiness, well-being, and satisfaction. Sheretta etal (2018) revealed that relationship with God correlated to psychological well-being, and also found relationship with God play a moderator role of racial stigma. thus a relationship with God considered as a coping mechanism that promote psychological well-being. Recently, AlEid etal., (2020) found that religiosity a statistical significant predictor for breast cancer patients' psychological well-being.

A review of exiting literature found that religiosity related with higher physical and psychological well-being. AlEid etal (2020), Seeman etal (2003), Hill etal (2006), and Park etal., (2009) found that religiosity play an important in determining mental health among patients with chronic diseases, and the relation between religiosity and health related outcomes. As well as, Affleck& Tennen (1996), Arnout (2012), Brown (2005), Change etal (1998), Foote etal (1990), Koenig (2012), Sigstad etal (2005), Stoyles etal (2015), Tsaousis etal (2013) and Yadav (2010), showed the role that hope play as a predictor to quality of life and positive personality traits of chronic diseases patients (such as HIV, Cancer diseases).

Also, Yildirin & Arslan (2020) showed the role of hope play to improve mental health during the times of crises. Bloch- Atef etal (2020), Shokes Peare- Finch etal (2020) and Trzebinski etal (2020) found that hope play an role in buffering anxiety and stress among COVID-19 patients. According to Seligman hope is one of the components of happiness and well-being, thus hope is very important for individuals' well-being. hope helps them, especially those with chronic diseases (such as COVID-19) moving them toward the future and mobilizing them to cope with stresses related to their diseases and to adapt with life.

Limitations and future directions:

This study presents a number of important findings that clarify the role of religiosity and hope in alleviating the negative effects of the stigma associated with COVID-19 on psychological well-being. Although these important results, the current study have many limitations, one of these is the heterogeneity of the participants, as most of them were more than 30 years year, and most of them were married. This affected the results of the current study, as the differences in hope and psychological well-being were in favor of these two groups of study sample individuals. Another limitation, that our current study relied on the descriptive design, and therefore it provides a limited real insight into the causal relationships between the variables of the present study. We still need experimental studies, and we may also need longitudinal studies to explore changes in religious and hope among COVID-19 patients, as well as investigate the development in their level of psychological well-being during the years following their affection with COVID-19. We also need intervention studies to detect the true causal relationship and the effect of interventions based on religiosity and hope to reduce the negative effects of the stigma associated with COVID-19, and increase psychological well-being among those COVID-19 patients, especially in light of the continued outbreak of the COVID-19 epidemic for years to come, according to World Health Organization reports, as an attempt to preserve the mental health of community members and sustainable human development.

Conclusion

This study provides another evidence for the relationship between religiosity and the stigma associated with COVID-19 and the psychological well-being of patients, and the mediating role of religiosity and hope with psychological well-being, which indicates a number of potential strategies to reduce the negative effects of the stigma associated with COVID-19 and to increase the level of psychological well-being among COVID-19 patients. Therefore, we hope that the results of the current

study will stimulate more future studies in this field, especially intervention studies, and longitudinal studies to better understand the nature of the causal relationships between religiosity, hope, stigma and well-being.

Declarations

A statement on participant consent:

The participate/patient consented to participate and/or publish this study. Informed consent was obtained from all individual participants included in the study.

Approval for the study was obtained by PNU Institutional Review Board (IRB) approval.

Acknowledgments

This research was funded by the Deanship of Scientific Research at Princess Nourah bint Abdulrahman University through the Fast-track Research Funding Program.

Competing interests:

The authors declare no competing interests.

References

Al Eid, N., Alqahtani, M., Marwa, K., Arnout, B., Alswailem, H.& Al Toaimi, A. (2020). Religiosity, Psychological Resilience and Mental Health among Breast Cancer Survivors in Kingdom of Saudi Arabia. *Breast Cancer: Basic and Clinical Research*, 17, 1-13.

Algarni, S.M., Almalki, H. A., & Al-Raddadi, R.M. (2017). Epidemic and pandemic events preparedness in Ministry of health hospitals, Jeddah, 2017, A Cross sectional study. *Int. J. Adv. Res*. 5(11), 590-598. doi: 10.21474/IJAR01/5806

Alqahtani, M. M., Holmes, T., Al-Rammah, T. Y., Alqahtani, K. M., Al Tamimi, N., Alhrbi, F. H., ... & Fadhel, F. H. (2018). Are we meeting cancer patient needs? Complementary and alternative medicine use among Saudi cancer patients: A qualitative study of patients and healthcare professionals' views. European Journal of Integrative Medicine, 24, 54-60

Alqahtani, M. M., & Salmon, P. (2008). Cultural influences in the etiological beliefs of Saudi Arabian primary care patients about their symptoms: the association of religious and psychological beliefs. Journal of religion and health, 47(3), 302-313.

Al-Rabiaah, A., Temsah, M., Al-Eyadhy, A.A., Hasan, G. M., Al-Zamil , F., Al-Subaie ,S., Alsohime ,F., Jamal , A., Alhaboob, A., Al-Saadi, B., & Somily, A. M.(2020). Middle East Respiratory Syndrome-Corona Virus

(MERS-CoV) associated stress among medical students at a university teaching hospital in Saudi Arabia. *J Infect Public Health*,13(5): 687-691 https://doi.org/10.1016/j.jiph.2020.01.005

Arnout, B, Al-Dabbagh.Z, Al Eid, N., Al Eid, M, Al-Musaibeh, S, Al-Miqtiq, M, Al-Zeyad, G. (2020). The Effects of Corona Virus (COVID-19) Outbreak on the individuals' Mental Health and on the Decision-Makers: A Comparative Epidemiological Study. *International Journal of Medical Research & Health Sciences*, 2020, 9(3), 26-47.

Arnout, B. (2012). Hope and self-concept as a predictor of the quality of life of renal failure patients. *Journal of the Faculty of Arts, Banha University*, 30, 567-626.

Arnout, B.(2020a). *COVID-19 Pandemic Crisis :And The New Face Of The World*. Scholars Press, Germany.

Arslan, G. (2016). Psychological maltreatment, emotional and behavioral problems in adolescents: The mediating role of resilience and self-esteem. *Child Abuse & Neglect*, *52*, 200-209.

Bjarnason, D. (2007). Concept Analysis of Religiosity. *Home Health Care Management & Practice*, 19(5), 350–355. https://doi.org/10.1177/1084822307300883

Bloch-Atefi, A., Day, E., O'Neill, G., Price-Robertson, R., & Snell, T. (2020). Reflections on psychotherapy and counselling from COVID-19 lockdown. https://pdf.printfriendly.com/downloads/pdf_1592891227_74a0aeA4.pdf

Brohan, E., Slade, M., Clement, S. & Thornicroft, G. (2010). Experiences of mental illness stigma, prejudice and discrimination: A review of measures. *BMC Health Services Research*, 10 (80), 1-12. DOI:10.1186/1472-6963-10-80.

Brooks, S.K., Webster, R.K., Smith, L.E., Woodland, L., Wessely, S., Greenberg, N., & Rubin, G. J. (2020). The psychological impact of quarantine and how to reduce it: rapid review of the evidence. *Lancet*, 395, 912–20. https://doi.org/10.1016/S0140-6736(20)30460-8.

Chang, E. C. (1998). Hope, problem-solving ability, and coping in a college student population: Some implications for theory and practice. *Journal of Clinical Psychology*, 54 (7), 953- 962.

Chatters, LM. (2020). Religion and health: public health research and practice. *Annu. Rev. Public Health*, 21,335–367.

Corrigan, P.W.; Bink, A.B.; Schmidt, A; Jones, N.; Rüsch, N. (2016). What is the impact of self-stigma? Loss of self-respect and the "why try" effect. *J. Ment. Health*, 25, 10–15.

Crandall, C.S. (1991). Multiple stigma and AIDS: Illness stigma and attitudes toward homosexuals and IV drug users in AIDS-related stigmatization. *Journal of Community & Applied Social Psychology*,1,165–172.

Dein , D., Loewenthal , K., Lewis, C. A., & Pargament, K. I. (2020) COVID-19, mental health and religion: an agenda for future research. *Mental Health, Religion & Culture*, 23,1, 1-9, DOI: 10.1080/13674676.2020.1768725

Ellison, C.G. (1991). Religious involvement and subjective well-being. *Journal of Health and Social Behavior*, 32(1), 80-99.

Ellison, C.G., & Levin, J.S. (1998). The religion-health connection: Evidence, theory, and future directions. *Health Education & Behavior*, 25(6), 700-720.

Federal Ministry of Health (2020). *Daily updates on the coronavirus*. Retrieved at: https://www.bundesgesundheitsministerium.de/en/press/2020/coronavirus.html. 21 March 2020, 3 O'clock.

Foote, A.; Piazza, A.; Holcomb, J.; Paul, P.; Daffin, P. (1990). Hope, self-esteem and social support in persons with multiple sclerosis*. Journal of NeurosciNurs*, 22 (3), 155-159.

Giorgi, G.; Arcangeli, G.; Ariza-Montes, A.; Rapisarda, V.; Mucci, N. (2019). Work-related stress in the Italian banking population and its association with recovery experience. *IJOMEH*, 32, 255-265.

Hill, T. D, Burdette A. M, Ellison, C. G., and Musick, M. A. (2006). Religious attendance and the health behaviors of Texas adults. *Preventive Medicine*, 42(2), 309-312. DOI: 10.1016/j.

International Labour Organization. (2020). *Addressing stigma and discrimination in the COVID-19 response: Key lessons from the response to HIV and AIDS*. ILO Brief, May, 2020. https://www.ilo.org/wcmsp5/groups/public/---dgreports/---gender/documents/publication/wcms_744799.pdf

James, P B. , Wardle , J., Steel, A and Adams, J. (2020). An assessment of Ebola-related stigma and its association with informal healthcare utilization among Ebola survivors in Sierra Leone: a cross-sectional study. *BMC Public Health*, 20,182 https://doi.org/10.1186/s12889-020-8279-7.

Kar S.K., Yasir Arafat S.M., Kabir R., Sharma P., Saxena S.K. (2020) *Coping with Mental Health Challenges During COVID-19*. In: Saxena S. (eds) Coronavirus Disease 2019 (COVID-19). Medical Virology: From Pathogenesis to Disease Control. Springer, Singapore.

Khalid, I., Khalid, T. J., Qabajah, M. R., Barnard, A. G., & Qushmaq, I. A. (2016). *Healthcare Workers Emotions, Perceived Stressors and Coping Strategies During MERS-CoV Outbreak*. Published online ahead of print February 4, 2016 doi:10.3121/cmr.2016.1303 Rapid Release CM&R: Marshfield Clinic Health System.

King, B. (2007). *Rethinking claims of spiritual intelligence: A definition, model, & measure.* Unpublished master's thesis, Trent University, Peterborough, Ontario, Canada.

Koenig, H.G. (2012). Religion, spirituality, and health: The research and clinical implications. *ISRN Psychiatry*, 1-33.

Lee S, Chan LY, Chau AM, Kwok KP, Kleinman A. (2005). The experience of SARS-related stigma at Amoy Gardens. *Soc Sci Med*, 61, 2038–46. doi: 10.1016/j.socscimed.2005.04.010.

Levin, J. (2001). God, love, and health: Findings from a clinical study. *Review of Religious Research*, 42(3), 277-293.

Li, W., Yang, Y., Liu,Z., Zhao,Y., Zhang, O., Zhang, L., Cheung5, T. & Xiang, Y. (2020). Progression of Mental Health Services during the COVID-19 Outbreak in China. *International Journal of Biological Sciences*, 16(10), 1732-1738. doi: 10.7150/ijbs.45120.

Link BG, Phelan J. C. (2020). *On stigma and its public health implications. Fogarty International Center. Stigma and global health: developing a research agenda*. Available in: http://www.stigmaconference.nih.gov/. Accessed in 2020

Long, K. N., Kim, E. S., Chen, Y., Wilson, M. F., Worthington Jr, E. L., & VanderWeele, T. J. (2020). The role of Hope in subsequent health and well-being for older adults: An outcome-wide longitudinal approach. *Global Epidemiology*, 100018

Markel H. (1997). Quarantine!: *East European Jewish immigrants and the New York City epidemics of 1892.* Baltimore: Johns Hopkins University Press.

Ministry of Health. (2020). *Daily report*, 20-June 2020.KSA.

Overholt L, Wohl DA, Fischer WA, II, Westreich D, Tozay S, Reeves E, et al. (2018) Stigma and Ebola survivorship in Liberia: Results from a longitudinal cohort study. *PLoS ONE*, 13 (11), e0206595. https://doi.org/10.1371/journal. pone.0206595

Person, B., Sy. F., Holton, K., Govert, B., Liang, A., and the NCID/SARS Community Outreach Team (2004). Fear and Stigma: The Epidemic within the SARS Outbreak. *Emerging Infectious Diseases* • www.cdc.gov/eid • 10, 2.

Pescosolido, B.A. (2013). The public stigma of mental illness: What do we think; what do we know; what can we prove? *J. Health Soc. Behav*, *54,* 1–21.

Phelan, J.; Link, B.G.; Dovidio J.F. (2008). Stigma and Prejudice: One Animal or Two? *Soc. Sci. Med* , 67, 358– 67.

Pollner, M. (1989). Divine relations, social relations, and well-being. *Journal of Health and Social Behavior*, 30(2), 92-104.

Quintana, F J. (2013). *The Influence of Religiosity and Stigma on Mental Health Outcomes for an African American and Latino Clinical Sample*. Doctoral Dissertations. 224. https://opencommons.uconn.edu/dissertations/224

Ramaci, T., Barattucci, M., Ledda, C., & Rapisarda, V. (2020). Social Stigma during COVID-19 and its Impact on HCWs Outcomes. *Sustainability*, 12, 3834.

Ramaci, T.; Pellerone, M.; Iacolino, C. (2016). Stress-related diseases: significant influence on the quality of life at workplaces. *Eur. Proc. Soc. Behav. Sci.*, 8, 29–38.

Reingold AL, Krishnan A. (2020). *The study of potentially stigmatizing conditions: an epidemiologic perspective. Fogarty International Center. Stigma and global health: developing a research agenda.* Available in: http://www.stigmaconference.nih.gov/. Accessed in 2020.

Santarelli, L.; Rapisarda, V.; Fago, L.; Vella, F.; Ramaci, T.; Ledda, C.; Bracci, M. (2019).Relation between psychosomatic disturbances and job stress in video display unit operators. *Work*, 64, 303–310.

Seeman, T. E, Dubin, L. F and Seeman, M. (2003). Religiosity/spirituality and health. A critical review of the evidence for biological pathways. *The American Psychologist*, 58(1), 53-63.

Shakespeare-Finch, J., Bowen-Salter, H., Cashin, M., Badawi, A., Wells, R., Rosenbaum, S., & Steel, Z. (2020). COVID-19: An Australian Perspective. *Journal of Loss and Trauma*, 1-11.

Sheretta, T., Pamela P., Elan C., Nikeea, C. & Marquisha, L. (2018). Religiosity and Coping: Racial Stigma and Psychological Well-Being among African American Girls. *J Relig Health*, 57,1980–1995. https://doi.org/10.1007/s10943-018-0644-9.

Shigemura J, Ursano RJ, Morganstein JC, Kurosawa M, Benedek DM. (2020). Public responses to the novel 2019 coronavirus (2019-nCoV) in Japan: mental health consequences and target populations. *Psychiatry and Clinical Neurosciences*, 74(4): 281–282. doi: 10.1111/pcn.12988

Snyder, C. R., Harris, C., Anderson, J. R., Holleran, S. A., Irving, L. M., Sigmon, S. T., ... & Harney, P. (1991). The will and the ways: development and validation of an individual-differences measure of hope. *Journal of personality and social psychology*, *60*(4), 570

Snyder, C. R., Rand, K. L., & Sigmon, D. R. (2002). *Hope theory: A member of the positive psychology family.* In C. R. Snyder & S. J. Lopez (Eds.), *Handbook of positive psychology* (p. 257–276). Oxford University Press.

Stoyles, G., Chadwick, A., & Caputi, P. (2015). Purpose in life and well-being: The relationship between purpose in life, hope, coping, and inward sensitivity among first-year university students. *Journal of Spirituality in Mental Health*, *17*(2), 119-134.

Trzebiński, J., Cabański, M., & Czarnecka, J. Z. (2020). Reaction to the COVID-19 pandemic: the influence of meaning in life, life satisfaction, and assumptions on world orderliness and positivity. *Journal of Loss and Trauma*, 1-14**.** DOI:10.1080/15325024.2020.1765098

Tsaousis, I., Karademas, E., & Kalatzi, D. (2013). The role of core self-evaluations in the relationship between religious involvement and subjective well-being: A moderated mediation model. *Mental Health, Religion, & Culture*, 16(2) 138-154.

UNICEF. (2020). *Social stigma associated with the coronavirus disease (COVID-19): A guide to preventing and addressing social stigma*. UNICEF Geneva.

Wagner, A.C.; Hart T. A.; Mc Shane, K.E.; Margoles, S.; Girard T.A. (2014). Health care provider attitudes and beliefs about people living with HIV: Initial validation of the health care provider HIV/AIDS Stigma Scale (HPASS). *AIDS Behav*, 18, 2397–2408.

World Health Organization (WHO). (2020). *Coronavirus*. Retrieved at: https://www.who.int/health-topics/coronavirus.21 March 2020, 2 O'clock am

Xiang, Y.T, Yang, Y., Li, W., Zhang, L., Zhang, Q., Cheung, T., Ng, CH. (2020). Timely mental health care for the 2019 novel coronavirus outbreak is urgently needed. *Lancet Psychiatry*, 4, 30046–30048.

Yadav, S. (2010). *Perceived social support, hope, and quality of life of persons living with HIV/AIDS: a case study from Nepal.* Springer Science+ Business Media B.V. 2010.

Yildirim, M., & Arslan, G. (2020). *Exploring the associations between resilience, dispositional hope, subjective well-being, and psychological health among adults during early stage of COVID-19*. DOI: 10.31234/osf.io/vpu5q

Zinnbauer, B.J., Pargament, K.I., Cole, B., Rye, M.S., Butfer, E.M., Belavich, T.G., & … Kadar, J.L. (1997). Religion and spirituality: Unfuzzying the fuzzy. *Journal for the Scientific Study of Religion,* 36(4), 549-564.

Figures

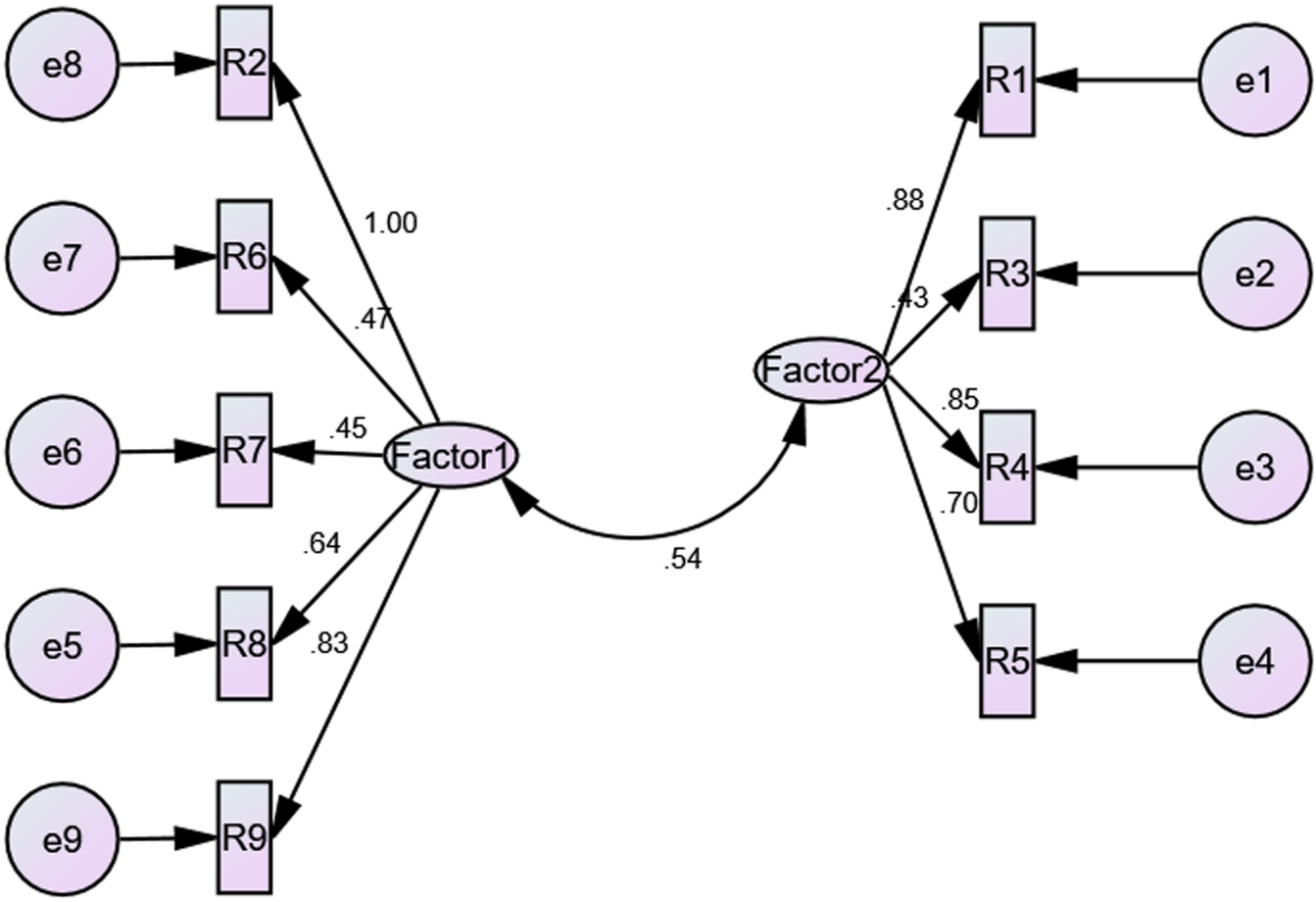

Figure 1

Confirmatory factor analysis for religiosity standards proposed model

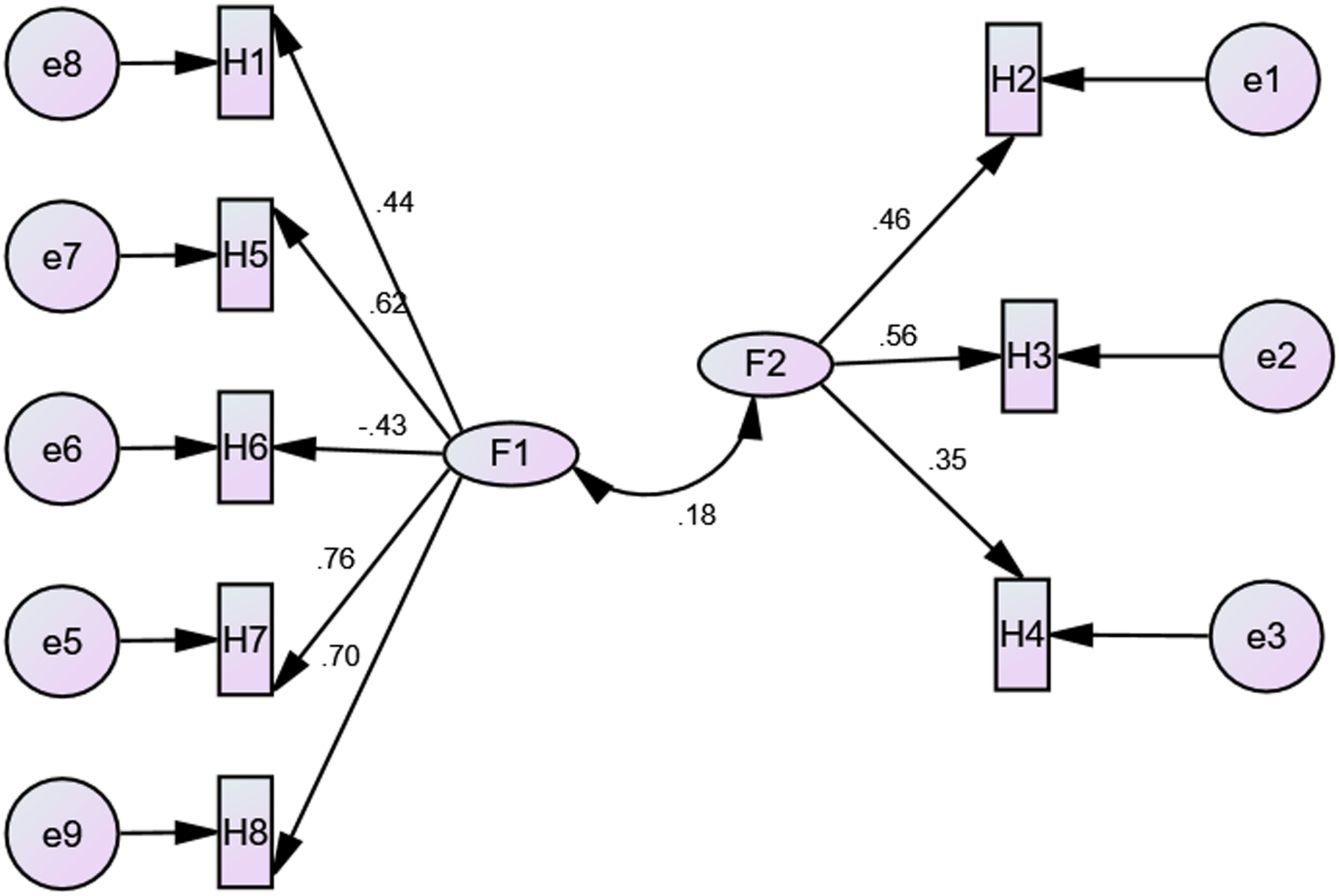

Figure 2

Confirmatory factor analysis of hope standards proposed model

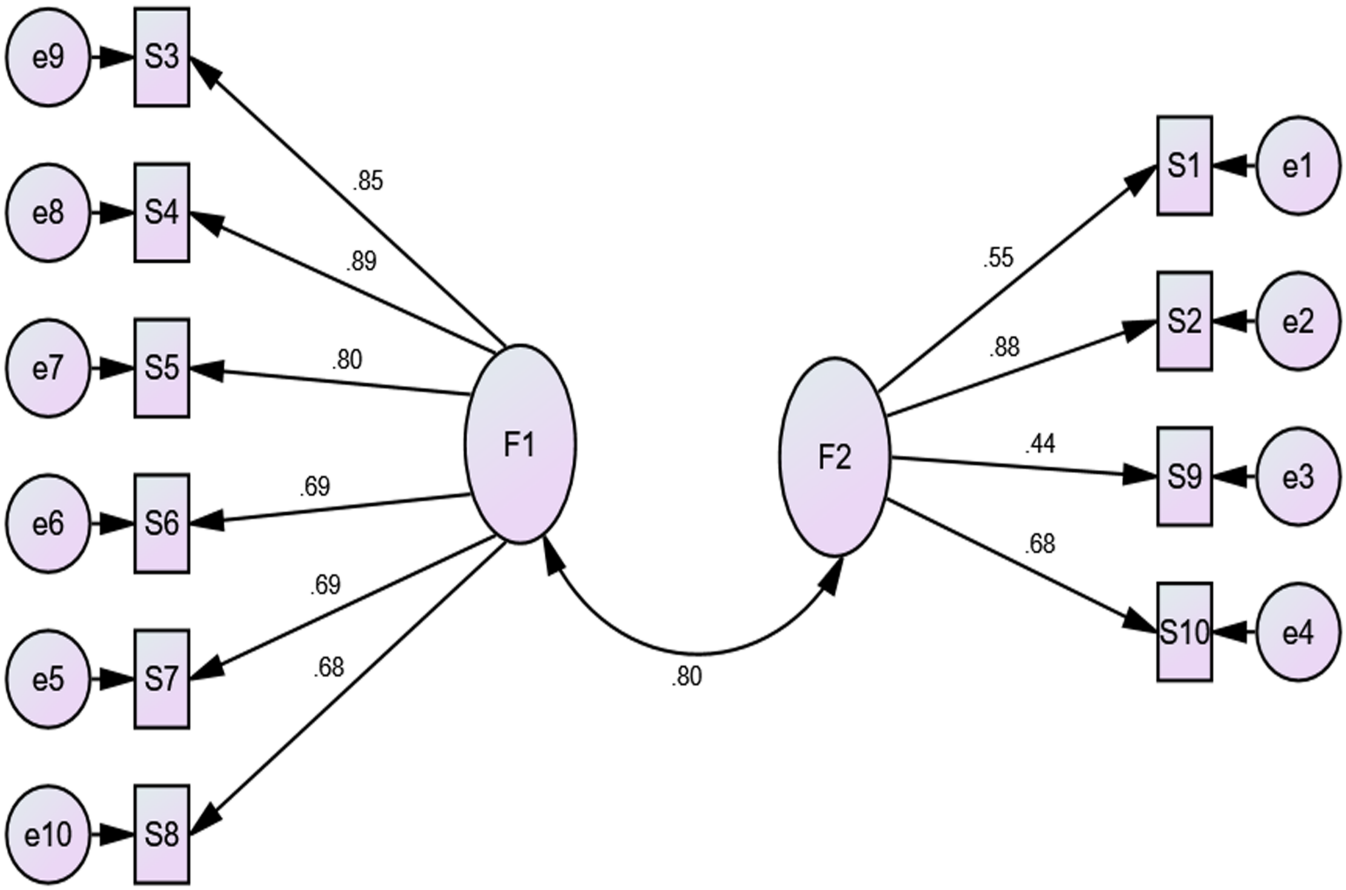

Figure 3

Confirmatory factor analysis of stigma standards proposed model

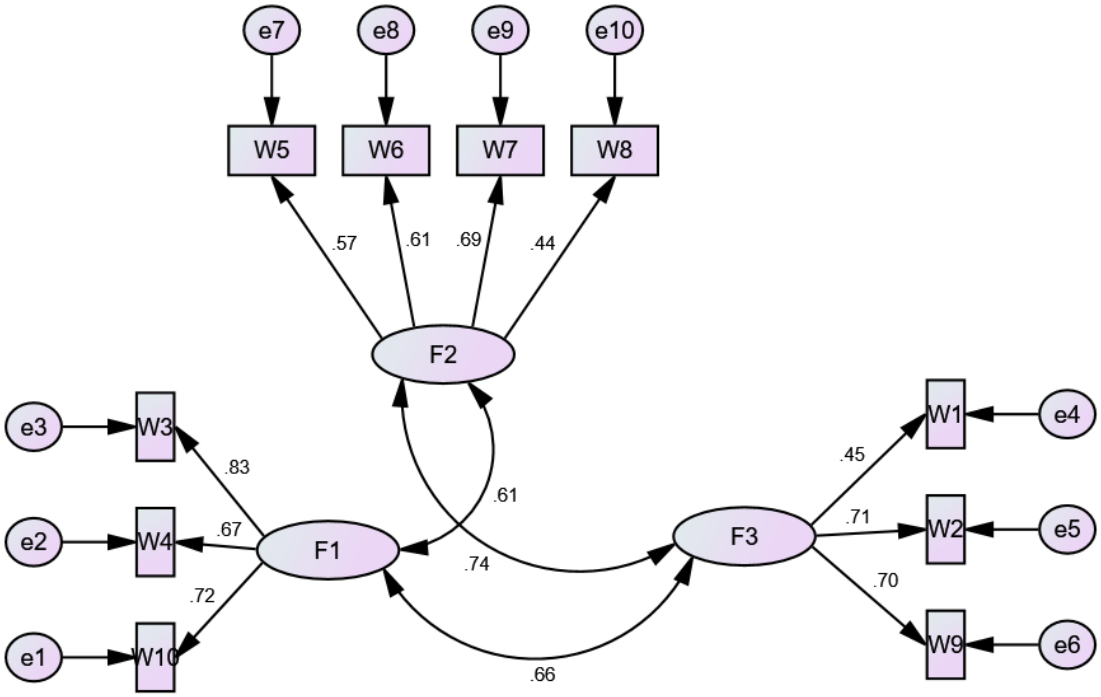

Figure 4

Confirmatory factor analysis of hope standards proposed model

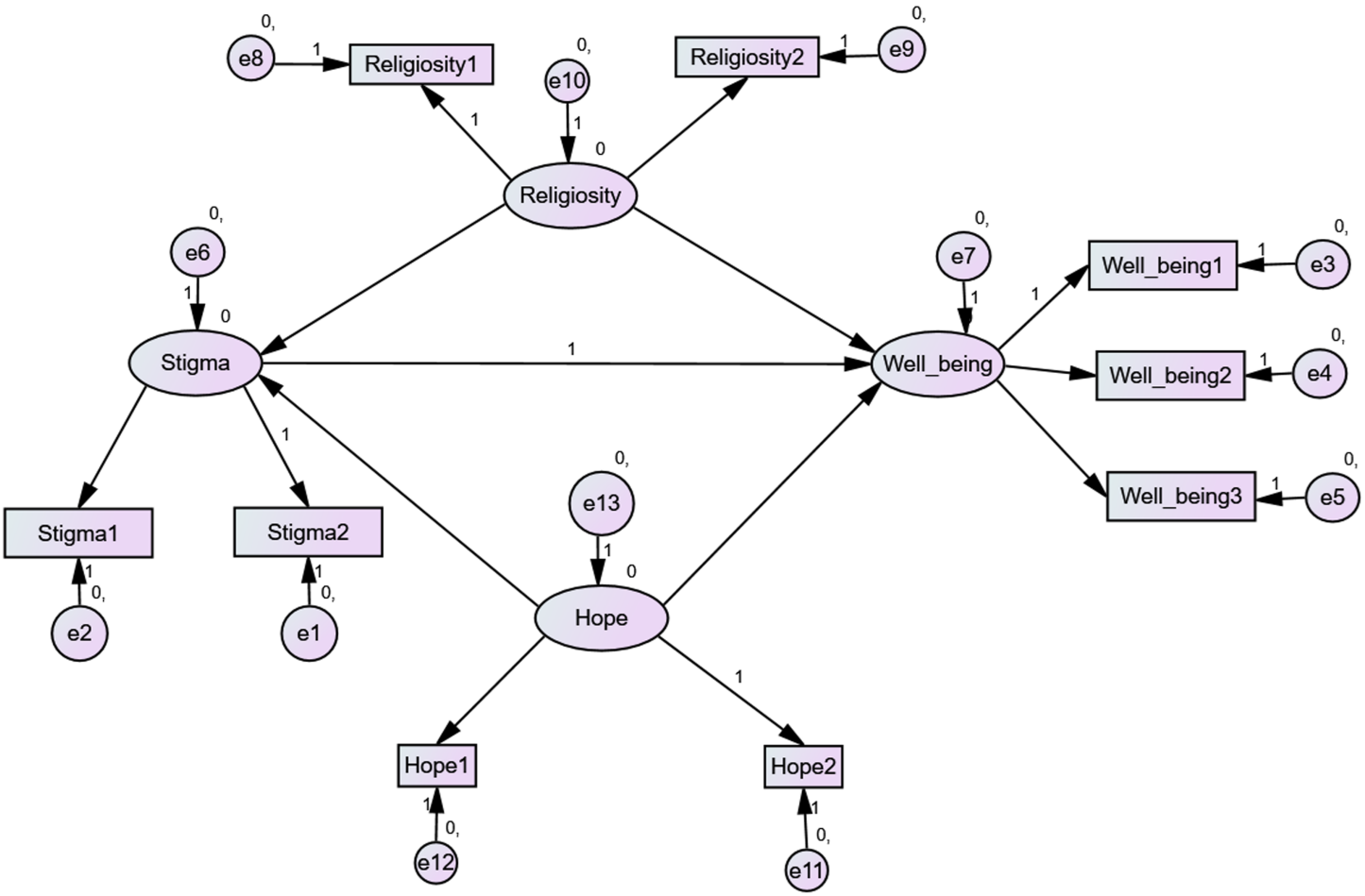

Figure 5

The structural equation model for the relation between religiosity, hope, stigma and well-being

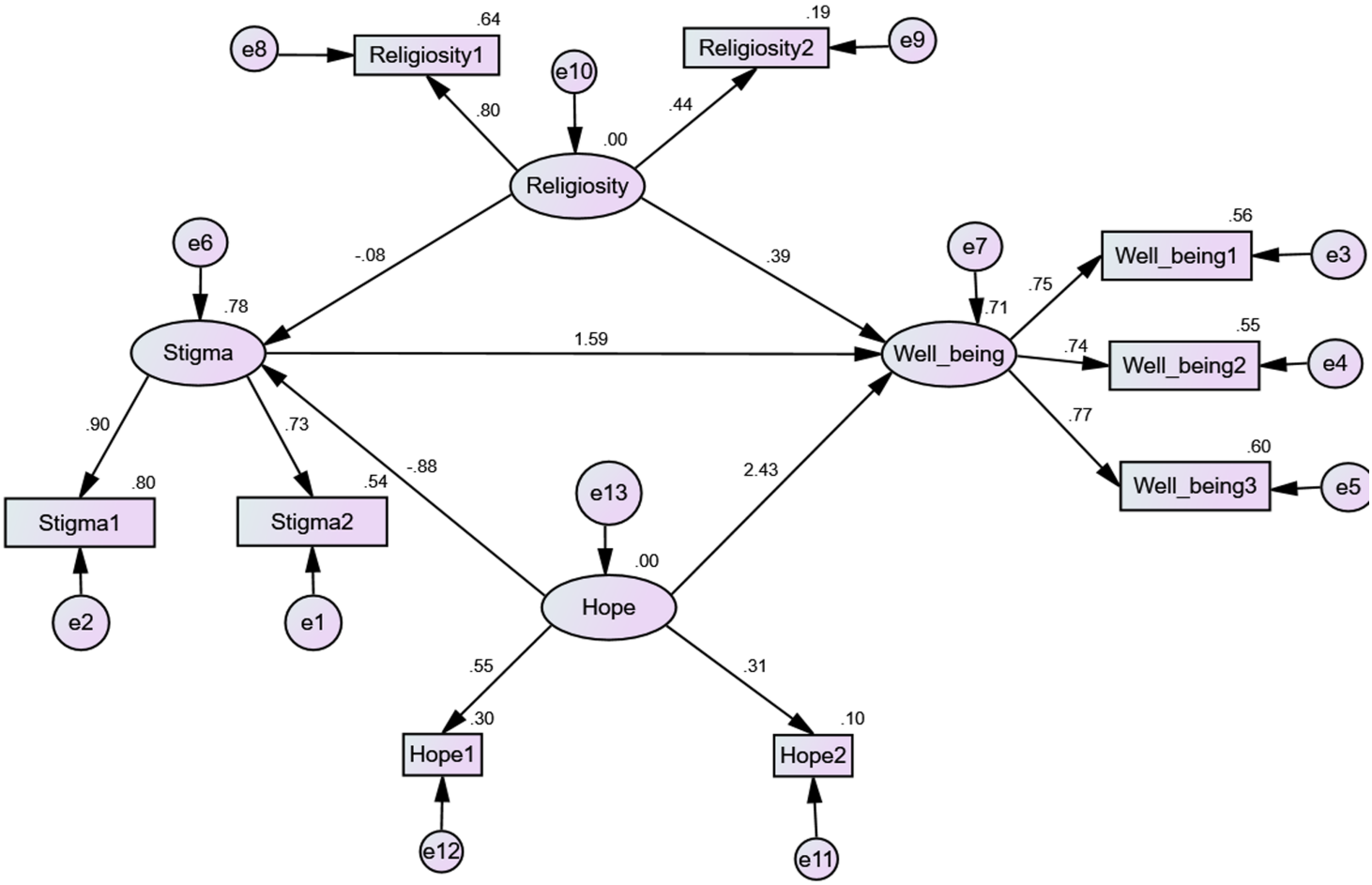

Figure 6

The structural equation model for the relation between religiosity, hope, stigma and well-being