A theoretical derivation of an Electomagnetic reactionless Drive using the Abraham Lorentz force

Ite Chen (konarooster@gmail.com)
Lewa Farms

Tara Cronin
Lewa Farms

Physical Sciences - Article

Keywords: Abraham Lorentz force, reactionless drive, thrust

Posted Date: July 23rd, 2021

DOI: https://doi.org/10.21203/rs.3.rs-738312/v1

Derivation of a Theoretical Reactionless Drive, Using the Abraham Lorentz force.

I-Te Chen: Roosterfarms, USA, edchen0@gmail.com

Tara Cronin: Roosterfarms, USA, Cronin.tara@gmail.com

1. Introduction:

A reactionless drive is the holy grail of theoretical space propulsion — a pervasive myth of an object which many have claimed to find, but which have all turned out to be apparitions — a device which can extend the life of propulsion systems in space to practical immortality. Under most thermodynamic and conservation of momentum analyses, a reactionless drive or non-propellant thruster, is the equivalent of a perpetual motion machine, which is theoretically impossible in physics. Most schemes for a reactionless drive being proposed today rely on emissions of ions, particles, or light; however, when these schemes work in theory they only produce minuscule amounts of thrust, even at perfect conditions — no reactionless drive has ever been demonstrated to work in practice at any scale. When such a drive is developed, space travel will open up tremendously due to the fact that spacecrafts will not have to carry propellant fuel while cruising.

By using the Abraham-Lorentz force, a theoretical and practical thruster can be theoretically derived and practically constructed. This paper will briefly review the idea of a reactionless drive, and some other theoretical proposals. It will then analytically derive a reactionless drive based on a specific application of the Abraham-Lorentz force. It will present simulated data on such a drive and discuss its key characteristics. Finally it will analyze the supposed violation of the laws of momentum and thermodynamics which should occur with this scheme. A benchtop working model of the theoretical drive derived in this paper will be presented.

Most of the described reactionless drives which are truly reactionless have proposed using the emission of various forms of photons as the means to transfer momentum and produce thrust. In practice, photo rockets are too inefficient to produce any thrust (McClymer 2019). In fact a thermodynamic analysis of such a drive shows that it would be close to a perpetual motion machine which is not possible (Higgens 2015). Other schemes for reactionless drives are based on science fiction such as vacuum cavities and warp drives (Lobo 2004), and nuclear drives which are not truly reactionless since they emit nuclear particles (Smith 1999). None of these can be modeled mathematically, let alone measured empirically.

The most well known reactionless drive is the so-called "impossible drive" by NASA. A pendulum is the best way to detect thrust and violations of the law of conservation of momentum. The Electromagnetic drive by NASA uses a pendulum to detect small thrusts (White 2016). This drive is powered by microwave emissions in a frustum cavity which produces a global form on the thruster (Peyre 2021). However, despite the empirical success of this drive, its actual thrust is negligible.

2. Materials and Methods.

A theoretical analysis of the proposed reactionless electron recoil drive is presented in this section. In figure 1 the dynamic model of the recoil drive is presented. The reactionless drive has four components as shown in this block diagram drawn in Simulscape. The first component "1" is a power supply which generates pulses which power the solenoid electromagnet in "2." This electromagnet is coupled to a second electromagnet via a linear spring "3". The passive electromagnet "4" is oriented in the same direction as "2" so that a pulse running through "2" will generate a counter magnetic pulse in "4."

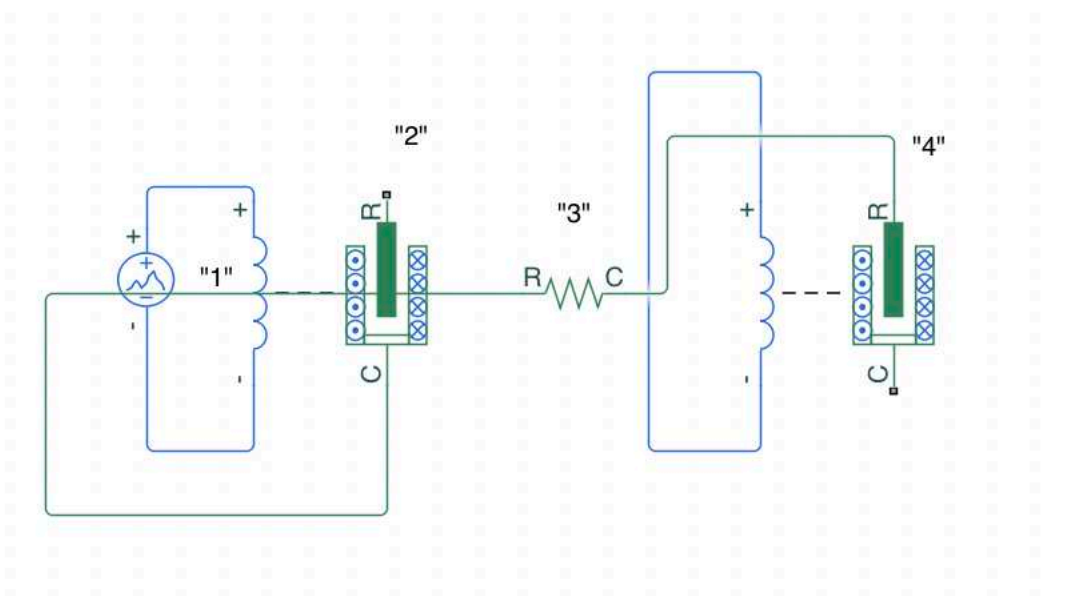

Figure 1: Schematic of a single cell electromagnetic engine.

This counter pulse will then cause the two magnets to jerk away from each other due to the two magnetic fields generated in the solenoids. This jerk is where the electron recoil force is generated, resulting in a net thrust in the direction of the power circuit.

Analytically we can describe the forces generated at the moment that the solenoids repel each other and jerk in opposite directions. A net force is emitted by the active coil which results in the production of thrust.

We being with the Abraham-Lorentz Radiative Force Equation:

1)

$$\mathbf{F}_{\mathrm{rad}} = \frac{\mu_0 q^2}{6\pi c}\dot{\mathbf{a}}.$$

2) At that moment, the Jerk can be described by the equation of magnetic component of the Abraham-Lorentz force,

$$\mathbf{F}_{\mathrm{magnetic}} = q(\mathbf{v} \times \mathbf{B}).$$

3) We also know that

$$\mathbf{F} = \frac{\mathrm{d}(m\mathbf{v})}{\mathrm{d}t} = m\frac{\mathrm{d}\mathbf{v}}{\mathrm{d}t} = m\mathbf{a},$$

4) We need to find *a* which is *da/dt* or the jerk of the active coil at the moment of analysis. Set equation 2 equal to Equation 3 and we see that the acceleration of the system is Equation 2 divided by the mass. If we differentiate this equation we get:

$$da/dt = (q * v/m * dB/dt) + (q * B/m * dv/dt)$$

5) Inserting Equation 4 into Equation 1 for *a* gives us the equation for *F-rad*.

$$F = \mu * q^3/(m(6\pi * c)) * (v * dB/dt + B * dv/dt)$$

The force of magnetism felt by the system should cancel each other out, since the magnets are symmetric, leaving only Equation 5 as the force being exerted on the system. This force is only felt by the active coil, since the passive coil does not have have a net charge on it (*q=0*), so *F-rad* on the passive coil is zero.

This astonishing result can be derived from the laws of classical electromechanics and states that the recoil force felt by a system is proportional to the instantaneous change in magnetic field.

The reactionless drive works by capturing the difference in velocity produced by the drive when a magnetic pulse is supplied and then withdrawn from the system. The system begins at rest, and so the velocity term of Equation 5 is 0 when *dB/dt* is positive. However, when *dB/dt* is negative as the magnetic pulse is withdrawn, the velocity term in Equation 5 is no longer 0 since the system is in motion. This produces the net recoil force in the system.

From Maxwell's laws, we also learn that the curl of the electric field equals the instantaneous change in the electric field:

6)

$$\nabla \times \mathbf{E} = -\frac{\partial \mathbf{B}}{\partial t}$$

This relationship informs our design of the reactionless engine as a powered solenoid.

7) Assuming the two coils are the same mass and connected by a spring, the system may be reset and another thrust generated.

$$F_s = kx$$

The net force from Equation 5 in the linear direction is then returned to the system by the spring which will provide half the force of Equation 5 to the active coil "2" and the other half of the force to the passive coil "3" resetting the system.

This concludes the analytical derivation of a reactionless electron recoil drive using classical electrodynamics.

Section 3: Simulation.

A simulation of the characteristics of this system was conducted in Matlab Simulink. The characteristics of the system and interesting results are discussed below.

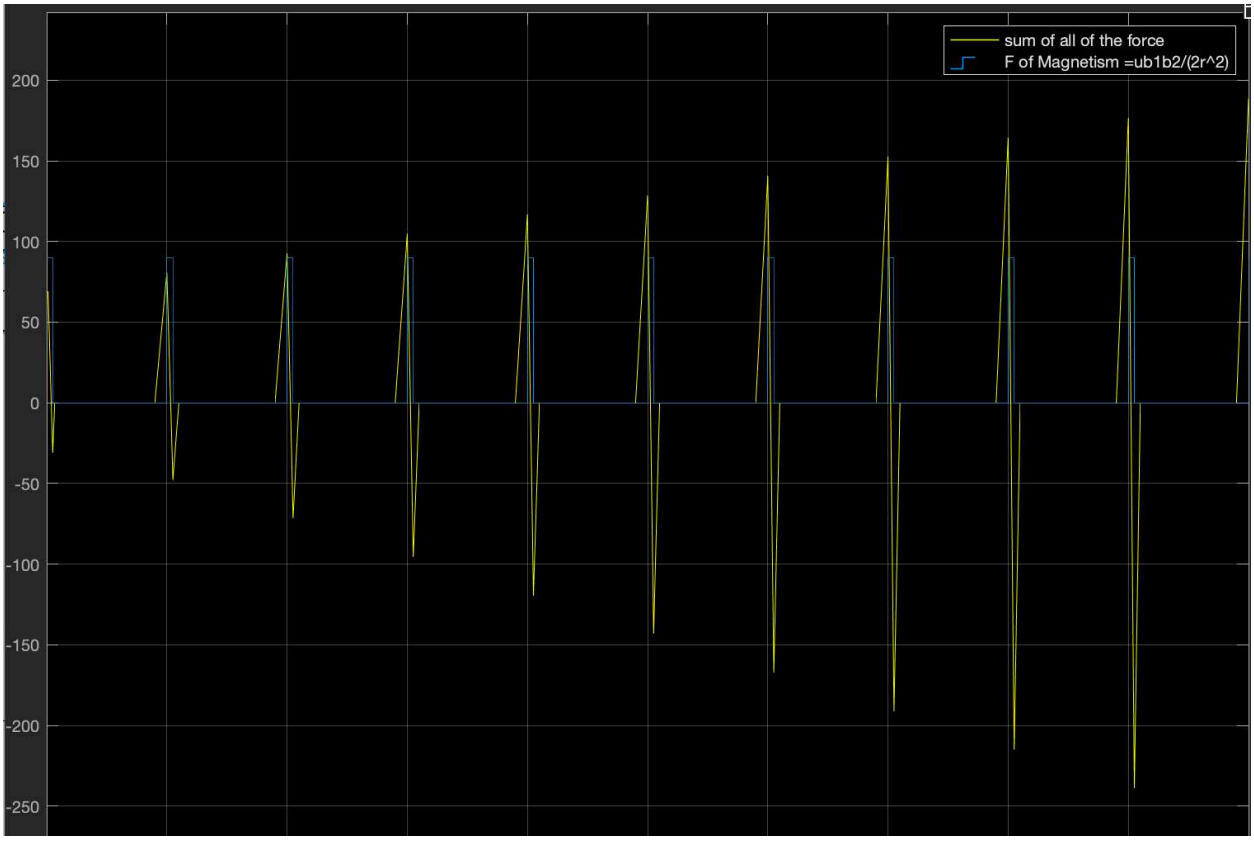

Figure 2: A constant electric pulse produces a net increasing force on the system.

Figure 2: Sum of the forces on the system overlaid with a constant magnetic pulse.

We can see that the net force is positive due to the velocity term in the system being positive when *dB/dt* returns to 0.

Furthermore, as the velocity of the system increases, the net forces on the system also increase, due to the increased momentum and resulting recoil in the electron. In some respects this is almost like an avalanche effect.

The actual power required to generate thrust will depend upon the efficiency of magnetic induction from one coil to the other. Thus, in an empirical study, the constant of mutual magnetic induction has to be measured. Furthermore another proportionality constant will need to be inserted to account for losses to friction in the spring, and losses in the system to other inefficiencies. Figure 3 shows an actual working model of the reactionless drive which produced enough thrust to move the 70kg assembly enough for the naked eye to detect.

Figure 3: Still image of video recording demonstrating a working model of the reactionless drive.

Conclusion:

A simple and elegant reactionless electromagnetic drive has been derived from theoretical principals using 7 lines of math. A simple 4 component block diagram describing the system is presented. The drive is simulated in Matlab showing that the net force produced by the drive depends on the change in velocity in the system between the initiation of the magnetic pulse and the withdrawal of the pulse. As the system increases in velocity, the net force is also increased.

The system does not violate the conservation of momentum, since the Abraham-Lorentz force occurs as a direct consequence of the conservation of momentum. An electron which emits a charged particle while jerking will have a recoil force in order to conserve the momentum of the charged particle. This is one of the fundamental laws of classical electrodynamics.

References:

White, Harold, et al. Measurement of Impulsive Thrust from a Closed Radio-Frequency Cavity in Vacuum. :17 Nov 2016 *Aerospace Research Central*

Peyre, Hugo. Straightforward EMDrive SetupwithNASA-LikeCavities
Progress In Electromagnetics Research M, Vol. 101, 1–8, 2021

McClymer, Jim. "Reactionless drive with conservation of momentum." *arXiv e-prints* (2019): arXiv-1902.

Higgins, Andrew J. "Reconciling a Reactionless Propulsive Drive with the First Law of Thermodynamics." *arXiv preprint arXiv:1506.00494* (2015).

Lobo , Francisco S N and Matt Visser 2004 *Class. Quantum Grav.* **21** 5871

Smith, Warren D. *Nuclear powered and reactionless rockets*. NECI tech. report, 1999. NECI, 4 Independence Way, Princeton NJ 08540. Patent applied for, 1999.

Supplementary Files

This is a list of supplementary files associated with this preprint. Click to download.

- fradsimulator.zip
- fraddemomatlabanim16.mp4
- ReactionlessDriveDemo.mov