Kinematic Analysis of compliant slider Crank mechanism

Ganesh D Korwar (ganesh.korwar@vit.edu)
Vishwakarma institute of Technology

Original Article

Keywords: Slider-crank mechanism, pseudo-rigid-body model, compliant mechanism, ADAMS

Posted Date: August 10th, 2021

DOI: https://doi.org/10.21203/rs.3.rs-740948/v1

Kinematic Analysis of compliant slider Crank mechanism

Prof.Ganesh..D. Korwar, ganesh.korwar@vit.edu
Mechanical Engineering Department, Vishwakarma institute of Technology,Pune

Abstract— **This study presents the design and formulation of a kinematic model of a compliant slider-crank micro mechanism and its comparison with the conventional slider-crank mechanism. This work aims with Experimental Analysis of Compliant Slider Crank Micro Mechanism for kinematic performance with a parametric variation. In addition, it also deals with the study of the Mechanical advantage of compliant micro mechanisms. A formulated model is developed using the pseudo-rigid-body model (PRBM). Motion analysis software is used to show the variation in slider displacement for known input link angle. Analysis of compliant mechanism is modeled by PRBM and FEA to analyze deflection. The mechanism is modeled in Adams. The results obtained from Adams are compared with experimentation. The displacements are fairly matches to simulation results. Better displacement as compared to rigid link mechanism can be obtained for smaller angular rotation. Finite element analysis (FEA) is used to show the stress distribution inflexible component for various types of hinges like rectangular cross-section flexible hinges, circular cross-section flexible hinges. Based on stress fatigue analysis is carried for both type joint by experimentally and FEA**.

Keywords— Slider-crank mechanism, pseudo-rigid-body model, compliant mechanism, ADAMS.

I. INTRODUCTION

Compliant mechanisms or flexible mechanisms are cataloged as those mechanisms which gain mobility from their links and flexible hinges, rather than the use of traditional kinematic pairs. The design of compliant mechanisms, as compared to conventional mechanisms require only a small scale of translation or angular rotation to achieve particular advantages, such as non-friction, no need for lubrication, ease of fabrication, and no need for maintenance. With this in mind, a flexible slider-crank mechanism was developed in this study as a replacement for a traditional slider-crank mechanism. S. Kota, J. Joe, Z. Li [1] focused on the unique methodology employed to design joint fewer mechanisms (called compliant mechanism) also illustrates a compliant stroke amplification mechanism that was recently designed, fabricated and tested for MEMS application.

Tank [2] investigated the transmission angle of a compliant slider-crank mechanism via two theorems. The transmission angle is an important parameter for the quality of motion transmission in a mechanism. The criteria for the design of mechanisms are low fluctuation of input torque, compact in size and link proportion, good force transmission, optimum transmission angle.In addition, flexible hinges, and links always undergo a large deflection during their motion, therefore, there is a need to model the kinematics that captures and predict more accurately their deflected shape. In past decades; several approaches have been developed to analyze the kinematic and dynamic behaviors of compliant links. The concept of the pseudo-rigid-body model has since been developed by Howell [3] for analyzing the kinematic behavior of flexible mechanisms. This method assumes that flexible hinges behave as revolute joints with torsional springs attached, while the thicker sections of the mechanism behave as rigid links. Using this approach, compliant mechanisms can be analyzed and designed using well-established traditional rigid-body mechanism theory [4-5]. Minna, NIGERIA [6] EXPLORED THE USE of the pseudo-rigid-body model to predict the dynamic behavior of compliant slider mechanisms.

A. Midha, L L. Howell, T. W. Norton [7] introduced a method for determining the limit positions of compliant mechanisms for which an appropriate pseudo-rigid-body model maybe created T. Pavlovic, N D. Pavlovic [8] have analyzed the influence of the geometry, as well as the material type of the compliant joints on the guiding accuracy of the compliant mechanisms.

Moreover, N T. Pavlovic, N D. Pavlovic [9] have dealt with the mobility of some compliant four-bar linkages as well as compliant spring guiding systems. N T. Pavlovic, N D. Pavlovic, M Milosevic [10] suggest the optimal parameters as well as the motion range of Scott-Russel compliant mechanism in order to obtain minimal deviation.

The first spatial compliant mechanism (RSSR) was studied by Tanık and Parlaktaş [11] the compliant version of another very common spatial mechanism, RSSP was proposed. Since the PRBM concept was employed for modeling the compliant RSSP, initially kinematic analysis of the rigid RSSP was summarized. All possible configurations of compliant RSSP mechanisms were classified and discussed.

This paper presents an optimal design and describes the kinematic behavior of a flexible slider-crank mechanism. An innovative design was developed using the concept of the compliant mechanism. Finite element analysis (FEA) is used to show variation of slider displacement due to change of input link angle.

II. PSUEDO RIGID BODY MODEL

In modeling and analyzing compliant mechanisms, the pseudo-rigid-body model approach is the almost-exclusive tool that is currently utilized. The purpose of the Pseudo-Rigid-Body-Model (PRBM) theory is to provide a simple method of analyzing systems undergoing large, nonlinear deflections. The PRBM concept is used to model the flexible members using rigid-body components that have equivalent force-deflection characteristics. Rigid-link mechanism theory may then be used to analyze compliant mechanisms. In this

way, the PRBM works as a bridge connecting rigid-body mechanism theory and compliant mechanism theory.

For eachflexible segment PRBM predicts the deflection path and force-deflection relationships of the compliant segments. The motion is modified by rigid links attached at pin joints. Springs are added to the model to accurately predict the force-deflection relationships of the compliant segments means the PRBM treats a flexible link (a flexure hinge) as a torsional spring, in terms of its compliant behavior. The key for each PRBM is to decide where to place the pin joints and what value to assign the spring constants.

A. *Cantilever Beam with a Force at the Free End*

Consider the flexible cantilever beam with constant cross section and linear material properties. If the deflection is large, they may be out of the range of linearized beam deflection equations and elliptic integral solutions else nonlinear finite element analysis may be used to perform the analysis. However, this method is cumbersome for the early design phases of compliant mechanisms. The PRBM of flexible beam provides the simplified but accurate method of analyzing the deflection of flexible beams and provides the designer a means of visualizing the deflection. The loading of the force at the free end of a cantilever beam commonly occurs in fixed-pinned segments of compliant mechanisms.

Large-deflection elliptic-integral equations show that for a flexible cantilever beam with a force at the free end, the free end follows a nearly circular path, with some radius of curvature along the beam's length. This idea will be used to developed parametric approximations for the beam deflection path.

1) Kinematic portion for PRBM: Figure 1(b) shows a PRBM of a large deflection beam for which it is assumed that the nearly circular path can be accurately modeled by rigid links that are joined at a pivot along the beam. A torsional spring at the pivot represents the beam resistance to deflection. The location of this pseudo-rigid-body characteristic pivot is measured from the beams end as a fraction of the beams length, where the fraction distance is γ l and γ is the characteristic radius factor. The product γ l, the characteristic radius, is the radius of the circular deflection path traversed by the end of the PRB link. It is also the length of the PRB link.

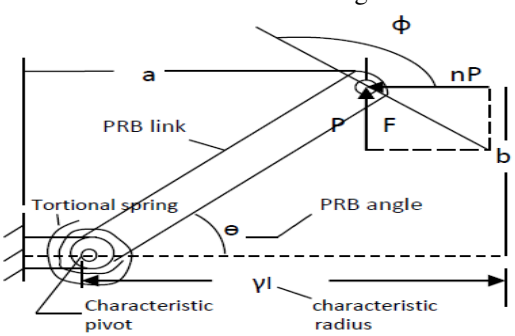

Fig 1. A Cantilevered beam under an applied force, F and its PRBM

The preceding PRB approximation will be used to parameterize the deflection path, the angular deflection of the beams end, and load deflection relationships in Θ, the PRB angle. The PRB angle is the angle between PRB link and its undeflected position, as shown in figure 1(b).

Where a and b are the x and y coordinates of the beam deflection, P is the vertical component of the force, nP is the axial force and F is the total force,

$$F=P\,(n^2+1)^{1/2}$$

and Φ is the angle of this force,

$$\Phi = a\tan 1/-n$$

Howells method describes the criteria for calculating an acceptable value for the characteristic radius factor, γ, by first determining the maximum acceptable percentage error in deflection. The value for γ that would allow the maximum pseudo-rigid-body angle, Θ, while still keeping the error in the position of the beam end less than 0.5% can be calculated by:

$$\Theta = a\tan b/\,a\text{-}l\,(1\text{-}\gamma)$$

The parametric constraint,

$$g\,(\Theta) = \text{error}/\varepsilon_e \leq (\text{error}/\varepsilon_e)_{max} \text{ for } 0<\Theta<\Theta_{max}\,(\gamma)$$

where error/ε_e is the relative deflection error, and εe is defined as the vector difference of the deflected position of point P and its original undeflected position.

The coordinates of the beam end of the compliant beam are given in terms of the PRBM angle, Θ:

$$a = l[1\text{-}\,\gamma\,(1\text{-}\,\mathrm{Cos}\,\Theta)]$$

$$b = \gamma\, l\,\mathrm{Sin}\,\Theta$$

where, characteristic radius factor $\gamma = 0.8$, for $-5 \leq n \leq 1.0$ and $135^{o} \leq \Phi \leq 63.4^{o}$

The relationship between Θ and Θ_0 is given by,

$$\Theta_0 = 1.34\,\Theta$$

2) Elastic portion for PRBM: The beams resistance to deflection may be modeled by a nondimensionalized torsional spring constant, Kθ, called the stiffness coefficient. Combined with geometric and material properties, the stiffness coefficient is used to determine the value of the spring constant for a particular beam's pseudo-rigid-body model. Kθ facilitates the calculation of the force required to deflect the rigid-body system that is equivalent to the force needed to deflect the compliant beam. The elastic portion also yields a Θ_{max} (Kθ) for accurate force prediction.

III. DESIGN OF A FLEXURE-BASED COMPLIANT MEACHANISM

A. *Design of a Flexure-Based Compliant Mechanism*

Howell [3] proposed that a compliant mechanism could be transformed into a rigid body mechanism with springs at the link points, i.e. PRBM technique is used in analysis and synthesis of compliant mechanisms. A PRBM is a rigid counterpart of a compliant mechanism which contains not only the rigid linkages and kinematic pairs, but includes appropriate discrete springs for modeling the compliance of flexible members. The design procedure for designing a FCM

is described by the flow chart reported in Figure 2. There are two important technologies which are used in the design procedure:

1. PRBM concept
2. Flexure hinge design equations which were used in design of flexure hinges

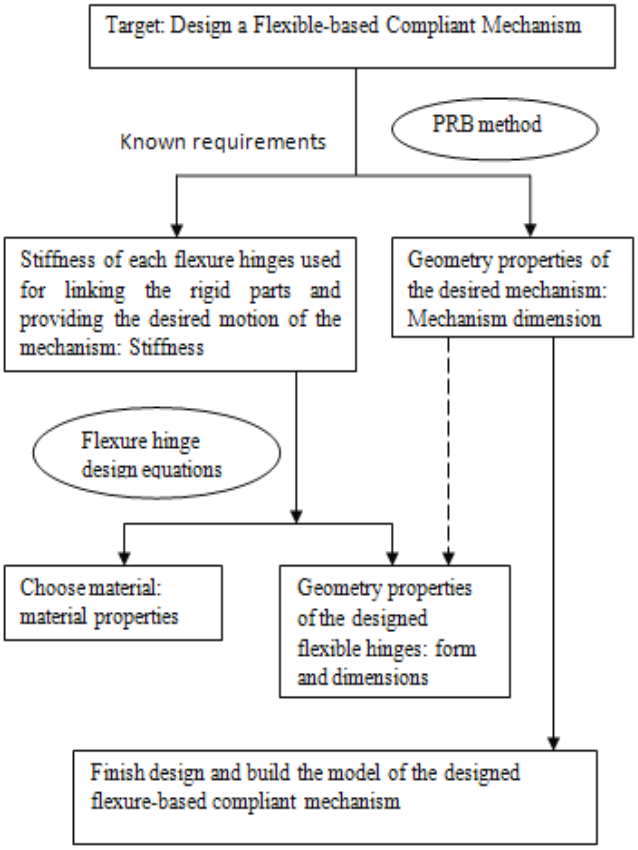

Fig.2: Design flow chart for designing a FCM

The dotted line in Figure 2 means that the mechanism dimensions can act as a reference condition for flexure hinges design. For a FCM, the stiffness of rigid parts must be assumed.

The key point in the procedure of designing a FCM is to design the flexure hinges of the mechanism. Flexure hinges are the most important components in the FCMs. A flexure hinge is a mechanical element that provides the relative rotation between adjacent rigid members through flexing (bending) instead of a conventional rotational joint, having similar rotation motion as that of traditional joints, or the same function; the only difference is that a rotational center is no longer collocated. Each individual flexure hinge should be accompanied by a complete set of compliances (or stiffness) that define its mechanical response to quasi-static loading. As noted in a previous study by Dirksen and Lammering [13], rectangular cross-section flexible hinges have low bending stiffness with high rotational deflection. The related design procedure for designing a flexure hinge is presented in Fig.3. In addition, the method using the generic design equations is also described in the flow chart of Figure 3.

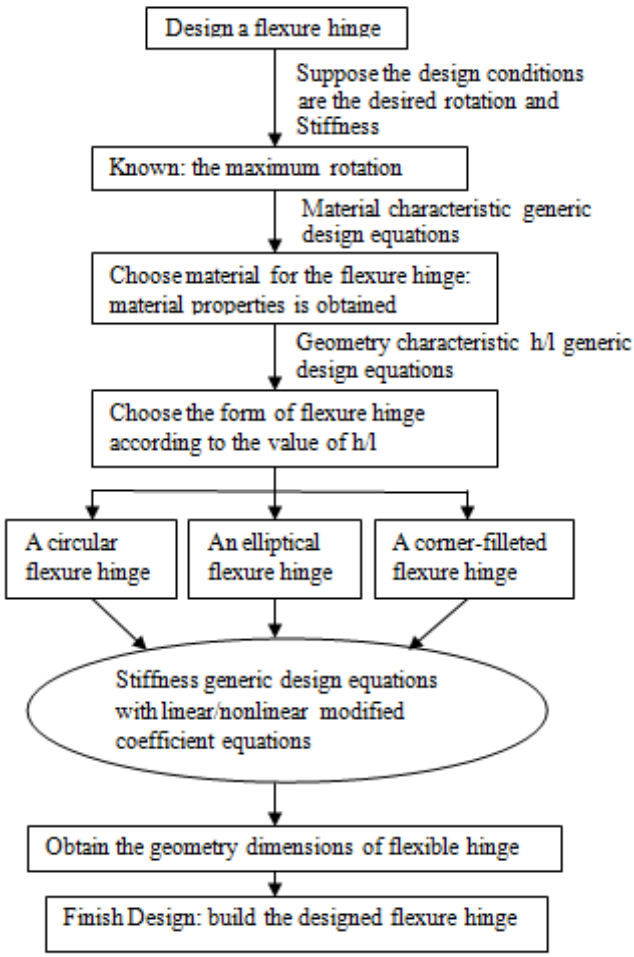

Fig.3: Design flow chart for designing a FCM

Before approaching towards design procedure of flexure based compliant slider-crank mechanism it was necessary to calculate values of certain parameters to construct model of compliant slider-crank mechanism i.e. length of flexible hinge l, Θ_3 (angle between crank and coupler) and X_B (slider displacement) with respect to Θ_2.

As shown in Figure 4(b), link r_2 is the rigid parts of the flexible slider crank mechanism; l is the flexible hinge connecting joint between coupler and slider to make the mechanism movable by using theirs elastic deformation instead of traditional revolute pair [3].

A. *Maintaining the Integrity of the Specifications*

The template is used to format your paper and style the text. All margins, column widths, line spaces, and text fonts are prescribed; please do not alter them. You may note peculiarities. For example, the head margin in this template measures proportionately more than is customary. This measurement and others are deliberate, using specifications that anticipate your paper as one part of the entire proceedings, and not as an independent document. Please do not revise any of the current designations.

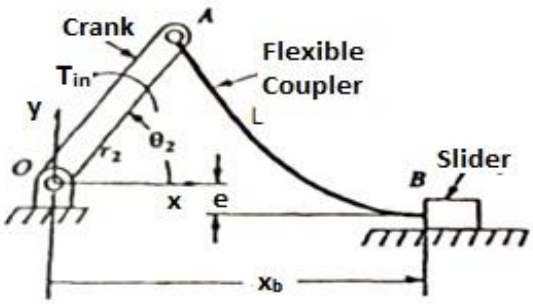

Fig 4.a

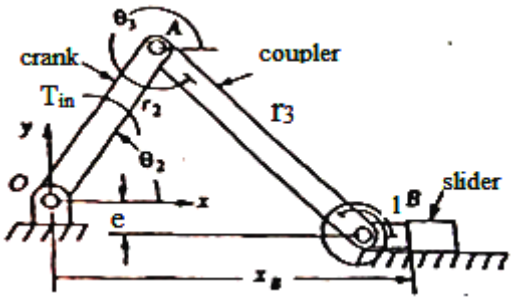

Fig 4 : (a) Compliant slider crank mechanism and (b) its PRBM

IV. Modeling

A. *Modeling in Adams*

Input parameters are:-crank length (r2)= 25 mm; length of flexible segment(L)= 110 mm; offset (e)= -19 mm; slider is free to move in horizontal direction , there is no horizontal reaction force (n= 0) and the force on the end of the flexible coupler is therefore vertical; characteristic radius factor (γ)= 0.852 mm; stiffness coefficient(Kθ)= 2.68, width of links (w)= 20 mm, height of flexible link (h) = 1.6 mm This model may now be analyzed using rigid-body mechanism equations:r_3 = 93.72mm, l = 16.28mm, I = 6.826mm3 and K = 9895.2 (for rectangular cross section)

Numerical result for displacement at various crank shown in table and fig

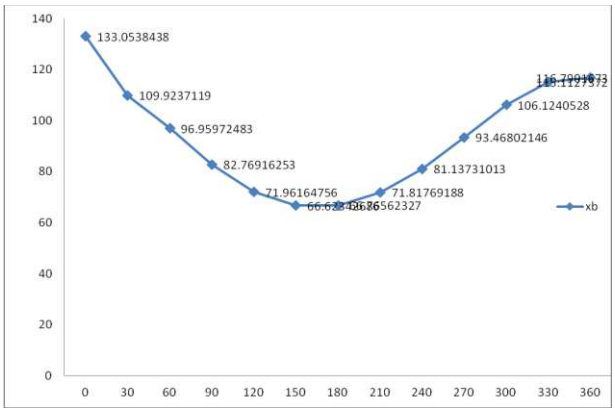

Fig 5 : variation of slider displacement due to change of input link angle

Modeling of Slider crank compliant mechanism in Adams by PRBM Method

The base of modeling in ADAMS is simulating the pseudo-rigid-body model which included rigid links related by revolute joints to each other. Length of the flexible segment is modified as it's shown in Figure. Considering the flexibility of the compliant segment a torsional spring is set on pivot.

The stiffness of this spring is obtained from equation. According to the geometry and density of each link, masses automatically calculate by this software.

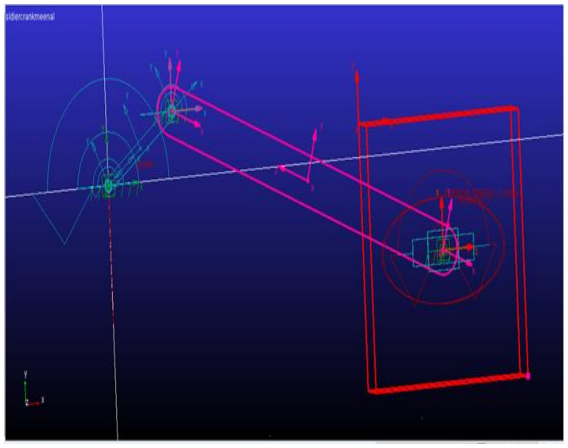

Fig 6 Compliant mechanism Model in Adams software

Slider Displacement Xb VS Θ2 for compliant slider crank mechanism by PRBM

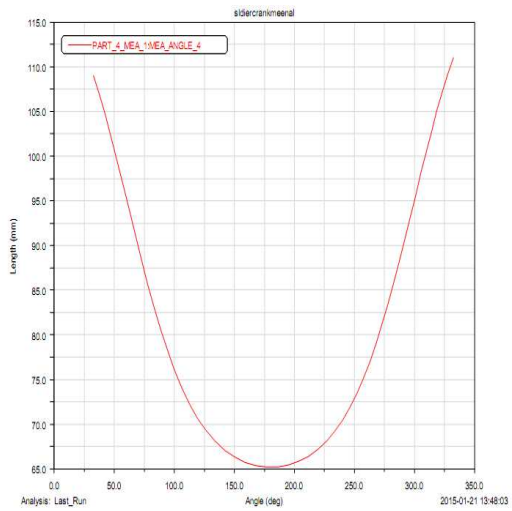

Fig 7 Slider Displacement X_b VS Input for compliant slider crank mechanism by PRBM

FEA model which is shown below is modeled in Adams software

- For FEA model, Beam element is used in the ADAMS. For flexible segment discrete flexible link will used for FEA model.

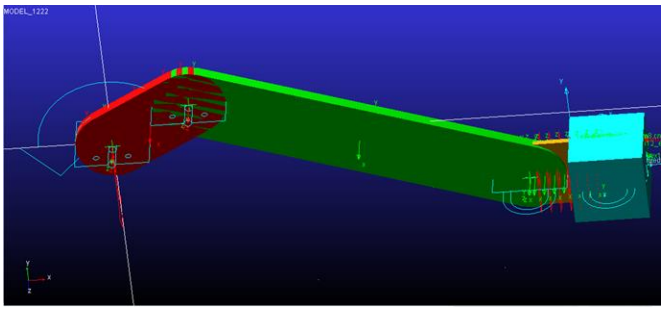

Fig 8 compliant slider crank mechanism by FEA

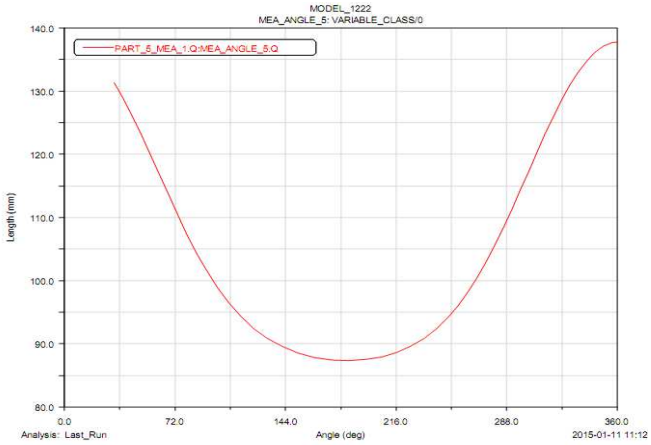

Fig 9 Slider Displacement Xb VS Θ2 for compliant slider crank mechanism by FEA

Comparison of numerical and simulation result (FEA and PRBM method)

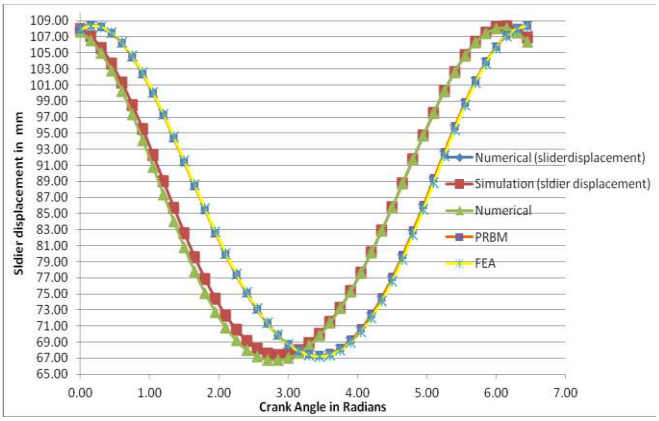

Fig 10 Comparison of complaint slider crank Mechanism

B. Modeling and Analysis in Solidworks and Ansys

Solid modeling was done using the solid works software:

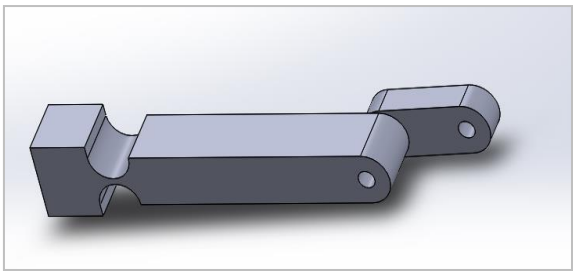

Fig 10 Complaint slider crank mechansim used in expermenattaion

The FEM analysis was used as a strong tool for calculating stress, relative rotation between the crank and the connecting rod, slider displacement and fatigue life. . This FEM analysis has been conducted in standard FEA package Ansys 16. The Material Aluminium alloy is used for the compliant hinge which is been directly selected from the engineering data.

Connections: Three new connections are been created in the form of joints. The three joints are as follows:

1. Revolute joint between connecting rod and crank (Joint 1)
2. Revolute joint between the ground and the crank (Joint 2)
3. Translational joint between the ground and base of the slider (Joint 3)

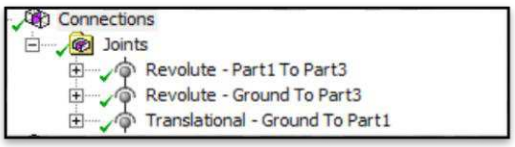

Fig11 Connection of joints in Admas

Boundary conditions:

In the analysis setting :Number of steps = 4,Auto time stepping= ON, Initial time step= 0.2 sec,Minimum time step = 0.1 sec,Maximum time step = 0.3 sec,Time integration = ON. Joint rotation is been provided to the crank. For each second, a rotation of 90 degree is been provided. So, rotation of 360 degree or full one rotation takes a total time of 4 seconds witch can be seen in figure. Rotation is been given to crank in tabular form.

Scope	
Joint	Revolute - Ground To Part3
Definition	
DOF	Rotation Z
Type	Rotation
Magnitude	Tabular Data
Lock at Load Step	Never
Suppressed	No

Fig 12 Input data

Tabular Data

	Steps	Time [s]	Rotation [°]
1	1	0.	0.
2	1	1.	90.
3	2	2.	= 180.
4	3	3.	= 270.
5	4	4.	360.
*			

1. Solutions

The graph and tabular data of relative displacement of the slider .The maximum displacement was 60.052mm

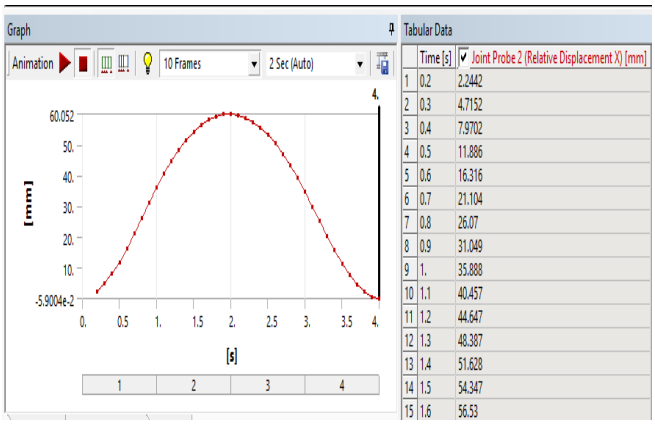

Fig 13 Slider Displacement

Total equivalent stress in hinge is maximum in outside surface of hinge but minimum at center. Also, Fatigue life was found out and results clearly shows the hinge is only part with minimum life.

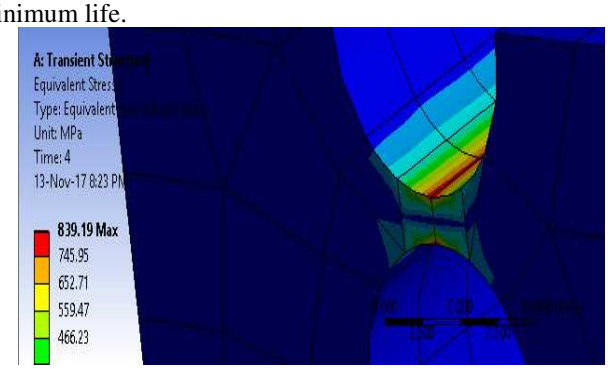

Fig14 fatigue Life

V. Experimentation

The experimental setup consists of Motor, Shaft, Disc with holes, Connecting rod, Slider, Base frame

Fig 15 Experimental setup

A. Conclusion

- The relative displacement values for the slider were 60.052mm for the FEA analysis and 60mm for the Experimental analysis. The values obtained by both the analysis are approximately equal.
- The FEA fatigue analysis shows that the circular face of the compliant hinge has the minimum life due to maximum fatigue takes place at the center of hinge. Similarly, while doing the experimental analysis the formation of cracks started taking place at the first rotation itself for the 30mm crank radius but for 5 mm crank radius there was no formation of cracks which suggest that compliant have good life for small crank radius .
- For larger crank radius instead of aluminum, a different material can be chosen which is more ductile in nature and able to withstand range of rotation of the connecting rod. The thickness of the hinge can be varied to increase the life of the hinge.
-

References

[1]. N. Lobontiu, Compliant mechanisms: design of flexure hinges. CRC press, 2003

[2]. L. L. Howell, Compliant mechanisms. Wiley-Interscience, 2001.

[3]. M.M.Sawant and P.R.Anerao, “Investigation of Circular Flexural Hinge used in Compliant Mechanism using FEA tool” in IJETS Vol.5, June 2016.

[4]. Yuen Kuan Yong,Tien-Fu Lu and Daniel C. Handley,” Review of Circular Flexure hinge design equations and derivation of empirical formulations” at Science direct, July 2007.

[5]. Wu Y, Zhou Z. Design calculations for flexure hinges. Rev Sci Instrum 2002; 73(9):3101–6.

[6]. Displacement Analysis of Rectangular and Circular Hinge for Compliant Micro–Gripper” R. S. Joshi, A. C. Mitra, S. R. Kandharkar ,March-2016

[7]. Akshay Vidap and Dr. Bhagyesh Deshmukh,” Modeling and analysis of complaint cantilever beam” in IJSR (ISSN:2319-7064) Vol.4, July 2015.

[8]. Engin Tanık, “Transmission angle in compliant slider-crank mechanism” , Mechanism and Machine Theory 46 ,1623–1632, 2011.

[9]. Minna, Nigeria, “Dynamic Behavior of Compliant Slider Mechanism using the Pseudo-Rigid-Body Modeling Technique”, AU J.T. 12(4): 227-234, Apr. 2009.

[10]. I.Her,A.Midha, “A Compliance Number Concept For Compliant Mechanism, And Type Synthesis”.

[11]. Souharda Raghavendra ,”Compliant Multi-Link Vehicle Suspension”, August 2008.

[12]. Ing. Qiaoling Meng, "A Design method for Flexure-Based-Compliant Mechanism on the basis of stiffness and stress characteristics",2012.

[13]. Nicolae Lobontiu, reference book of "COMPLIANT MECHANISM, Design of flexure hinges".

[14]. Thanh-Phong Dao, Shyh-Chour Huang, "Design and Analysis of Flexible Slider Crank Mechanism", International Journal of Mechanical Industrial Science and Engineering vol.: 8 No: 5, 2014.

[15]. Chao-Chieh Lan," Computational Models for Design and Analysis of Compliant Mechanisms" December 2005.

Declaration

Funding: This work has no funding availed from any national or international source.

Conflict of interest/competing interest: Authors declare that there is no conflict of work related to the work presented in the manuscript.

Availability of data and materials:

The authors confirm that the *data* supporting the findings of this study are available within the article along with the *supplementary material*. Raw data were generated at Vishwakarma Institute of Technology, Pune test facilities. Derived data supporting the findings of this study are available from the corresponding author on request.

Authors' contributions:

A. Ganesh Korwar

Author 'A' developed the theoretical formalism, performed the rigid body simulations and the required numerical simulations.

Acknowledgements: Authors would like to thank supporting staff members from Vishwkarma Institute of Technology, Pune.

Ethics approval: Not applicable to the present manuscript