Pollution Control for Nature Surface Water

MALIK FAKRON [a]

[a] Department of Chemical Engineering, University of Calabria , Rende, Italy

ABSTRACT:

The huge amounts of pollutants in nature surface water in. This contaminates due to different operations in surface water. During the past fifty years, increasing attention has centered on the discharge of sewage into coastal waters. This practice has been widely criticized on the grounds that sewage-polluted seawater is a health hazard to bathers. The pollution of the surface water is becoming more and more serious. The marine environment has undergone great changes. This research is presented two methods to control pollution and rehabilitation environment. First method by using temporary floating a waterfall for removing containment from the surface water and reducing concentration total suspended matter in surface water and reducing concentrations for phosphate, nitrogen, organic carbon. Second method by using towed rotating biological contactors to reducing concentrations for phosphate, nitrogen, and organic carbon. To control effects of algae bloom occurs. These two methods are converted to heterogeneous reactor with solid catalysts; this reactor is multi step treatment. First step is screening and second step is solid catalyst bed reactor. As waterfall or towed rotating biological contactor is multi bed reactor. The water quality assessment for selection best scheme for enhancement water quality for surface water is based on acceptable japan environmental ministry guidelines for surface water quality level for bathing.
Keyword: water quality, guide line, process scheme, waterfall, wastewater

Corresponding author: Malik Fakron, E-mail: malikfakron@mail.com

INTRODUCTION:

The beach is great place to play, swim and cool off on a hot sunny day. However, swimming in these areas is not risk-free. There is always a risk when swimming in a natural water body. Natural water bodies always have a level of contamination from various sources. Eutrophication problem is one of the most typical water pollution issues in many countries. Water environment in lake coastal area and river is deteriorated by excess amount of nutrient that supports the excessive growth of phytoplankton. Water bloom or red tide is an explicit phenomenon of the eutrophication in which water ecosystem is disturbed. Industrial activities in surface water such as oil refining; food processing, chemical manufacturing, and mining and wastewater are potential threats both to surface water resources and human health. Surface water pollution raises concerns of waterborne diseases and environmental hazards. Sewage of domestic origin comprises a particularly unhealthy mixture of microorganisms. The microbiological hazards encountered in water-based recreation include viral, bacterial and protozoan pathogens. Primary concern has usually been directed towards gastrointestinal illnesses acquired from recreational waters, although acute febrile respiratory illness and infections of the eye, ear, nose and throat have all been identified as acquired through bathing. As known the pollution due to wastewater in the nature surface water is big issue due to inability the natural cleans these pollutants, due to the heavy load of pollutants. Demands are consequently made for more elaborate or even for full treatment of the sewage of coastal towns to offset this risk. The presumption that such a risk exists has, however, not been supported by adequate bacteriological or epidemiological evidence. Both medical officers of health and public health engineers have pressed for detailed studies of the subject on which a rational policy could be based. Epidemiological evidence relating particularly to the risks of contracting poliomyelitis or enteric fever through bathing in sewage-polluted seawater has been collected with the co-operation of medical

officers of health of coastal areas. Main risk is introduced the pollutants into the food chain or generation dermatology problems for swimmers or damage aquatic life and changing in marine aquatic life as results eutrophication nature surface water [1]. Due to high concentration of nutrition C, N, P. eutrophication (algae bloom) is generated anaerobic condition in a surface water and this will kill all fish and most of the marine life.[2] Environmental impact assessment for discharging different types of wastewater and petroleum derivatives is required for understanding different types of environmental degradation due to mankind activities. The pollutants in natural water body are two main types' residential wastewater and industrial wastewater. The main pollutants are C, N, P, Heavy metals and radioactive metals. The treatment process is dependent on the water quality of nature water and the types of pollutants. Every type of pollutants in the nature water body is treated by certain process. Protection the nature water is helped the future of next generation and reducing the cost for different effects of pollutants on public health. The concept of rehabilitations nature surface water quality is important for environment protection. This concept is a tool for protection the resources. The idea is used a waterfall to treatment the natural surface water as a part from environmental protection protocol.

USING THE WATERFALL AS A TOOL FOR REHABLIATION THE SURFACE WATER:

Analysis for the surface water quality over a year is required to define the main pollutants. This is very high risk for public health. Selection of the process scheme for removing these containments, to acceptable level for bathing. As known the heavy metal containments are deposited in the bottom of the nature surface water and then dissolved again in the water body depending on weather. For surface water to make sure COD less than 2 mg/L. This is based on Japan environmental ministry guideline. Selection the processes for reducing concentration of pollutants load. The main target for this research is introduced floating waterfall as a unit contains several processes for enhancement quality nature surface water to be treated. The main processes are strainer, filtration based on suspended matter, aeration based on COD or BOD, flotation based on oil & petroleum products, Reducing C, N, P load by trickle filter reactor technology. This unit is based the trickle filter technology concept but in mobile floating base size and depending on the size of surface water to be treated. The pilot study is required for selection the scheme and best operation conditions for restoring the surface water quality at acceptable level. First step is measurement pollutants load and selection the process scheme based on these measurements. Biological nitrogen removal process was proposed about 30 years ago but its history as full scale plant is shorter. Nowadays there are many full-scale plants of nitrogen removal working and its application is still increasing. Nitrogen removal process employs the functions of nitrifying organisms and denitrifying organisms. These organisms help each other properly in the process. Functions of each group of bacteria in the process are known to some extent. Although practical operation of the process shows no particular difficulties, further knowledge from the viewpoint of population dynamics of these bacteria is needed to improve the process. Biological phosphorus removal process employs unique function of complex microbial community. The bacteria accumulate and release phosphorus for their survival in stressed condition. The polluted nature surface water treatment technology should maximize this function by controlling the environmental condition for the bacteria. Biological phosphorus removal Process is challenging from the viewpoint of research on microbiology.

USING TOWED SUBMERGED ROTATING BIOLOGICAL CONATCTOR FOR REHABLIATION THE SURFACE WATER:

The rotation disk process is similar to the trickling filter process, because both use 'fixed growth reactor, the advantages include economics, simple operation and maintenance, suitability. Rotating biological contactors (RBC), also called rotating biological filters, are fixed-bed reactors consisting of stacks of rotating disks mounted on a horizontal shaft. They are partially submerged and rotated as wastewater flows through. They are used in conventional wastewater treatment plants as secondary treatment after primary sedimentation of domestic Blackwater, or any other biodegradable effluent. The microbial

community is alternately exposed to the atmosphere and the wastewater, allowing both aeration and assimilation of dissolved organic pollutants and nutrients for their degradation. Rotating biological contactors (RBC) are a conventional aerobic biological wastewater treatment unit. Conventional biological treatment means activated sludge systems and fixed film systems such as trickling filters, or RBC [19, 21, and 22]. The advantage of all these systems is that they are compact and that they efficiently reduce organic matter [22]. However, they are high-tech and generally require skilled staff for construction as well as for operation. RBC can treat domestic Blackwater and any other low- or high-strength biodegradable wastewater (e.g. industrial wastewater from food processors or paper mills). They have been found to be particularly effective for decentralized applications (on the level of a small to medium community or industry/institution), where electricity and skilled staff are available [21]. TheRBC unit is fixed in floating frame; the frame is towed by ship to reduce organic matter concentration in polluted nature surface water.

CASE STUDY DESIGN OF THE WATERFALL STATUE :

The main part in this method is trickling filter bed with plastic media design, the method of design based on measurement BOD, COD C, N, P in the required area and also dependent freshwater or seawater. The design process based on quantity of water and pollutants loads. Recognition of the importance of the effect of filtering media and their packing in the filter bed is incorporated in these later developed equations. Effects include Determination of hydraulic characteristics, detention time, and amount of biofilm development on the media before limiting of the oxygen supply. First step is design primary sedimentation tank and the shape shall be rectangular, the ratio between length and width for the rectangular basin over 3 and also dependent on surface water quality. The structural materials are mainly GRP or strong and resistant PVC plastic for all the processes inside this waterfall. This waterfall is constructed as statue for installation permanent beautiful waterfall. The waterfall has floating base for installation in nature water body with multiple intakes under nature water. The foundations of the waterfall are moveable concrete foundation and the frame is fixed by anchor bolts to a concrete foundation. Second step is design trickling filter calculated depth of the filter bed reactor. [2,3, 4, 5]

$$\ln(Se/So)=-kD/Q^{n} \quad (1)$$

The filter depth shall less than or equal 2m or dependent on geometry of waterfall. Then calculated surface area of the filter [3]

$$A_S = Q_0/Q \quad (2)$$

$$D_a = \sqrt{4\,{}^{A_s}/_{\pi}} \quad (3)$$

The waterfall is the sustainable solution for removing pollutants in natural water body. The design unit of waterfall for real data for seawater quality in Arzew port industrial area in Algeria[14], with BOD 600PPM the waterfall statue is consisted from five trickling filter reactors in series straining as in fig.5 to be. The diameters of these trickling filters are started from 17 m in first stage,20 m second stage,26 m third stage to 36 m in stage four. This waterfall is reduced BOD to less than 200ppm with daily flow rate 1000 /Day. This waterfall is reduced the pollution in Arzew to environmental acceptable level if operated six months. A structural for a waterfall will be different if this statue permanent. This waterfall statue is powered by solar energy or any renewable energy source.

Today this is only option but tomorrow is required, due to huge amounts of pollutions in the environment. Controlling and reducing pollution are our main strategy to reach the sustainable city. The direct effects and indirect effects of pollution are very high on public health for the society.

CASE STUDY DESIGN OF THE TOWED SUBMERGED ROTATING BIOLOGICAL CONATCTOR FOR REHABLIATION THE SURFACE WATER:

In the Rotating Biological Contactor, wastewater is purified using microorganism membranes which are attached to disks. The disks slowly rotate with approximately 60% of surface area submerged in the nature surface water. By absorbing oxygen from the air and pollutants from the nature surface water[22], the pollutants are decomposed aerobically. While new microorganisms are continuously increased on the disks, old microorganisms whose activation has declined drop off the disks. The RBC process allows the wastewater to come in contact with a biological film in order to remove pollutants in the nature surface water before discharge of the treated nature surface water to the environment.

$$Sn = \frac{-1+\sqrt{1+(4)(0.00974)\left(\frac{As}{Q}\right)Sn-1}}{(2)(0.00974)\left(\frac{As}{Q}\right)} \qquad (4)$$

This formula is calculated the soluble BOD concentration at each stage for RBC unit. The standard surface area for each disk is 9300. This is based on sBOD organic loading rate 15g sBOD/m2.d. The design unit of RBC 1000 /Day for real data for seawater quality in Arzew port industrial area in Algeria[14], with BOD 600PPM the RBC unit is consisted from five disks in series. Each disk have diameter 3.5 m and length 8.5 m, the sBOD concentration is reduced in first stage to 77PPM,In second stage to 25ppm,In third stage to 12PPM,In fourth stage to7PPM,In last stage to 5PPM. The RBC unit is reduced pollution in Arzew to environmental acceptable level if continuously operating.

DISCUSSIONS:

The waterfall and the towed RBC are two methods for reducing pollution in nature surface water is Every method has certain advantages and disadvantages, from operation and maintenance in open area polluted seawater ports, the RBC unit is the best choices, the waterfall statue is the best choices for small polluted closed lakes. To be installing as permeant statue. But in general from all different points of views from the cost to operation and maintenance, the towed RBC is the best choice. The pilot plant study is important for getting more information and to enhancements the performance for these units.

. **CONCLUSIONS:**

- The waterfall statue and the towed RBC were the Tool for enhancement nature surface water quality. This solution is suitable to implement in polluted nature surface water such as lake, seawater because most pollinations are original wastewater, the only way to reduce this pollution to reduce organic matter concentration (BOD, P, and N).
- Quantification Direct cost for pollution and indirect cost for pollution are important to increase awareness, of different stakeholders, about the problem of pollution in nature surface water. And also Quantification direct effects for pollution and indirect effects for pollution on public health are important of a society.
- Pilot study is required for both designs to reaching best design and best operation efficiency for this process to controlling and reducing Seawater pollution.
- From operations and maintenances and costs and time in open area polluted seawater ports The towed RBC unit is the best choices

• The waterfall and Towed RBC are removed of carbonaceous organic materials for first trickling filter. Second object is removal nitrate by biological denitrification for second trickling filter and also to increase dissolved oxygen in nature water.

Nomenclature and units:

As **:** surface area of the filter M^2

Da:diameter m
D **:** filter depth m.

K : reaction rate constant dependent on water quality and biofilm media(0.21)
n media factor (0.5) for plastic media
Q_0***:*** Hydraulic loading M^3/ M^2Day

Q : Average daily flow M^3/Day

So : Influent BOD in mg/l
Se:Desired effluent BOD in mg/l
Sn-1 : BOD concentration at stage n-1 mg/l RBC unit
Sn : BOD concentration at stage n mg/l RBC unit

V: volume of filter bed reactor

1g =1 ***US Fluid Gallon*** =0.0037854117891320312 ***Cubic Meter***

1 ft^2=0.092903 ***square Meter***

1*ft*=0.3048m

ACKNOWLEDGEMENTS
The Author would like to thank the Japanese environment ministry for all references

RERERENCES:

[1]Anonymous, (2014). Seawater http: //file.upi.edu/ Directory / FPIPS / JUR._PEND. _GEOGRAFI / 194902051978031-DJAKARIA_M_NUR / AIR__LAUT.pdf. Accessed on October 13, 2015.

[2]Apriadi, D. (2005). Heavy Metal Content of Hg, Pb and Cr in Water, Sediment and green mussels (*Perna viridis l.*) Waterway Kamal Muara, Jakarta Bay. Department of Water Resource Management. Faculty of Fisheries.

[3]Arielle, R. N. (2011). Content Relationships Lead (Pb) in water with oyster meat (Crasosstrea cucullata) in the Port of Coastal Fisheries Mayangan Probolinggo, East Java. Skripsi. UNIBRAW. Malang.

[4]BSN (National Standardization Body). (2009a). SIN 7387: Limit for Heavy Metal Contamination in Food. BSN, Jakarta. 25 p.

[5] JAPAN Sewage works Association ,Design Standard for municipal wastewater treatment plants, (2013)

[6]Marsh-McBirney Inc 1990. Model 2000 installation and operations manual.

[7]Masi, F. & Martinuzzi, N. 2007. Constructed wetlands for the Mediterranean countries: hybrid systems for water reuse and sustainable sanitation. Desalination, 215, 44-55.

[8]Matthews, R.R., Watt, W.E., Marsalek, J., Crowder, A.A. and Anderson, B.C. 1997. Extending retention times in astormwater pond with retrofitted baffles. Water Quality Research Journal of Canada, vol. 32, pp. 73-87

[9]Metcalf & EDDY ,Wastewater engineering treatment and reuse

[10]Minch, V. A., J. T. Egan, and M. Sandlin, "Design and Operation of Plastic Filter Media," JWPCF, Vol 34 (1962), pp 459-469.

[11]National Research Council, "A Mathematical Model for Trickling Filter Design,"Sew. Works Jour., Vol 18, No. 791 (1946).

[12]Norris, D. P., et al., "High Quality Trickling Filter Effluent Without Tertiary Treatment," JWPCF, Vol 54 (1982), pp 1087-1098.

[13]Paul, E.A. & Clark, F.E. 1996. Soil microbiology and biochemistry. 2nd edition. Academic Press, San Diego.
[14]Redouane and Mourad, J Pollut Eff ContDetermination of the Sea Waters Quality of Arzew-Algeria Gulf 2017, 5:2
[15] Richard J.Stenquist ,Kathryn A.Kelly, CONVERSTING TRICKLING FILTER TO PLASTIC MEDIA Design and performance ,(1980)
[16] Schulze, K. L., "Load and Efficiency of Trickling Filters," Jour. WPCF. 32 (1960), pp 245-261.
[17]Smith, D.W, and Hrudey, SE., Design of Water and Wastewater Services for Cold Climate Communities, Seminar at 10th IAWPR Conference, Edmonton ALB Canada,June 1980
[18]U.S. Environmental Protection Agency, Pretreatment of Pollutants Introduced into Publicly Owned Treatment Works**,** Federal Guidelines, October 1973.
[19]U.S. Environmental Protection Agency, Process Design Manual for Wastewater Treatment Facilities for Sewered Small Communities**,** Technology Transfer Series, EPA Publication 625 1-77-009, October 1983.
[20]Wagner, E.G., and Lanoix, J.N., Excreta Control for Rural Area**,** World Health Organization, Palais des Nations, Geneva, 1982.
[21]Winkler, M. Biological Treatment of Wastewater**,** Halsted Press, 1981.
[22]Winneberger, J.H.T. (ed.), Manual of Greywater Treatment Practice**,** Ann Arbor Science Publishing, Inc., Ann Arbor MI 48106, 197

Fig.1 surface water pollution

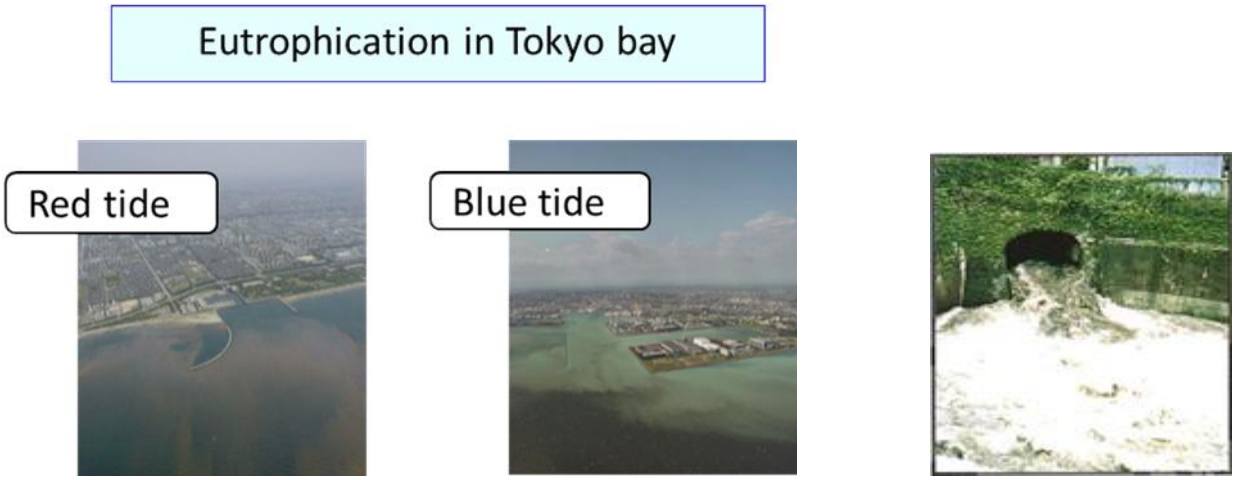

Fig.2 Eutrophication in Tokyo Bay

Fig.3 polluted beach

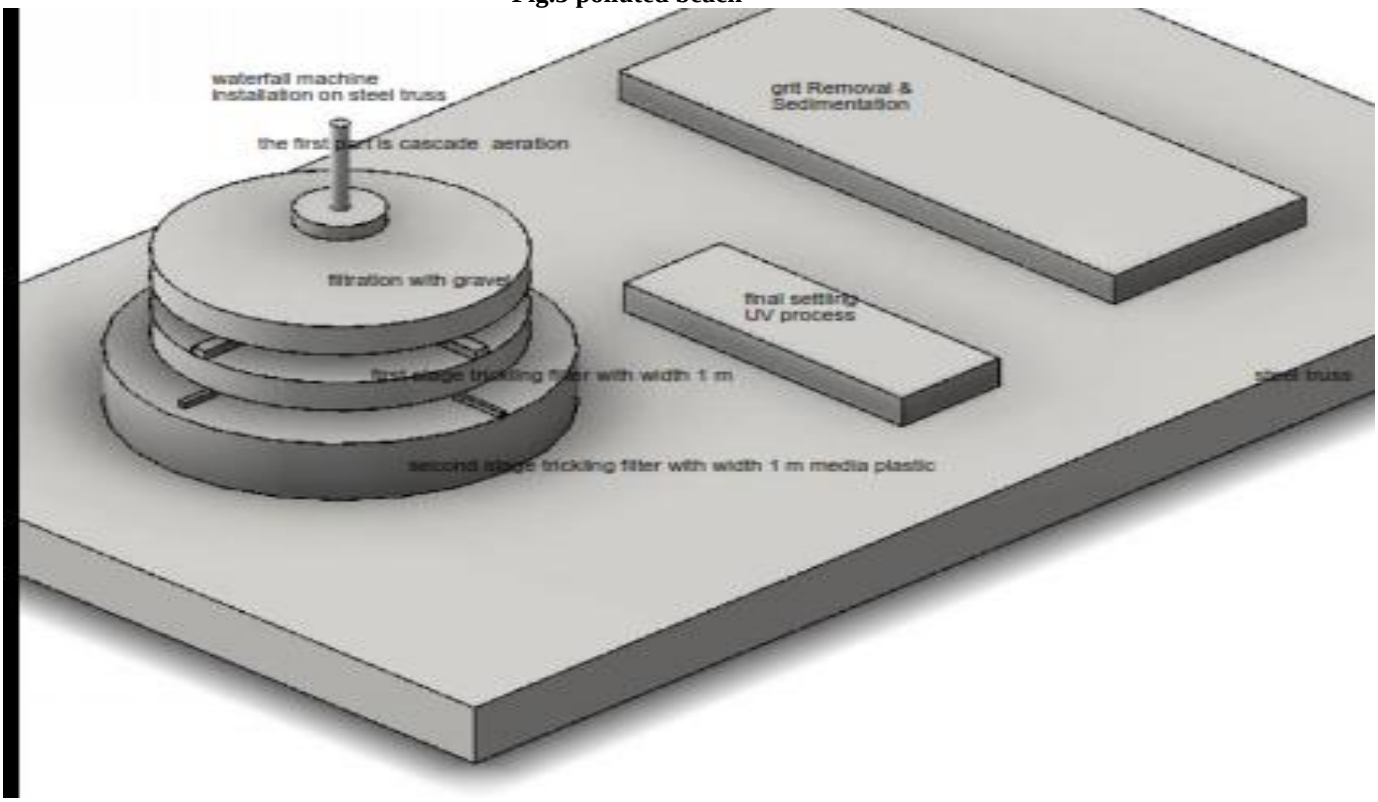

Fig.4 Design For The Waterfall Statue

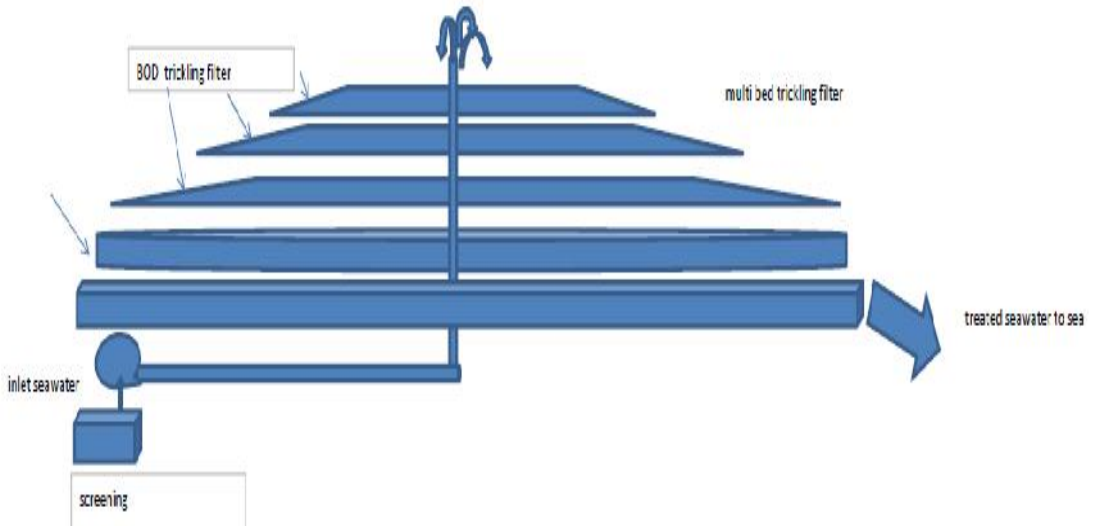

Fig.5 Design For The Waterfall Statue

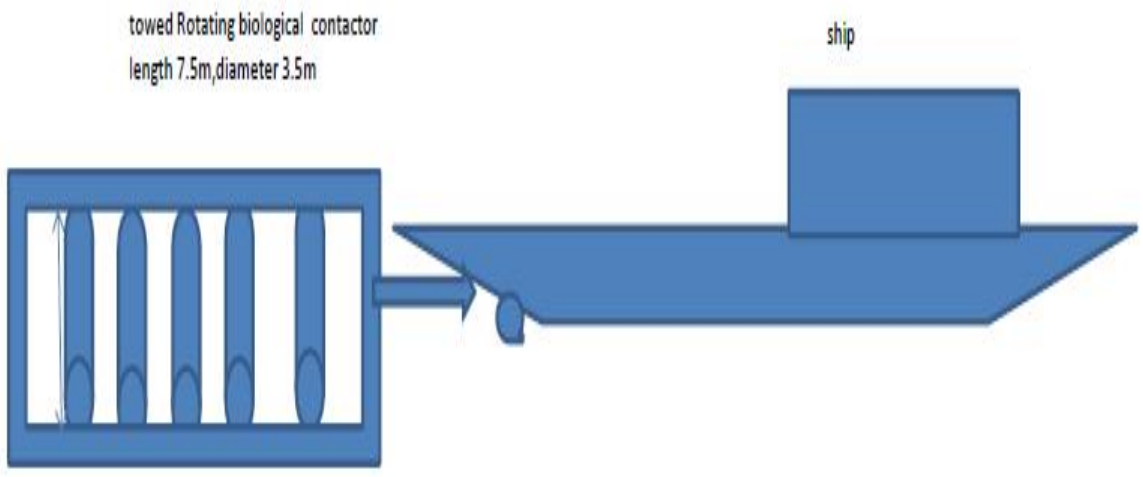

Fig.6 Design For towed rotating biological conatcors

Fig.7 ARZEW PORT

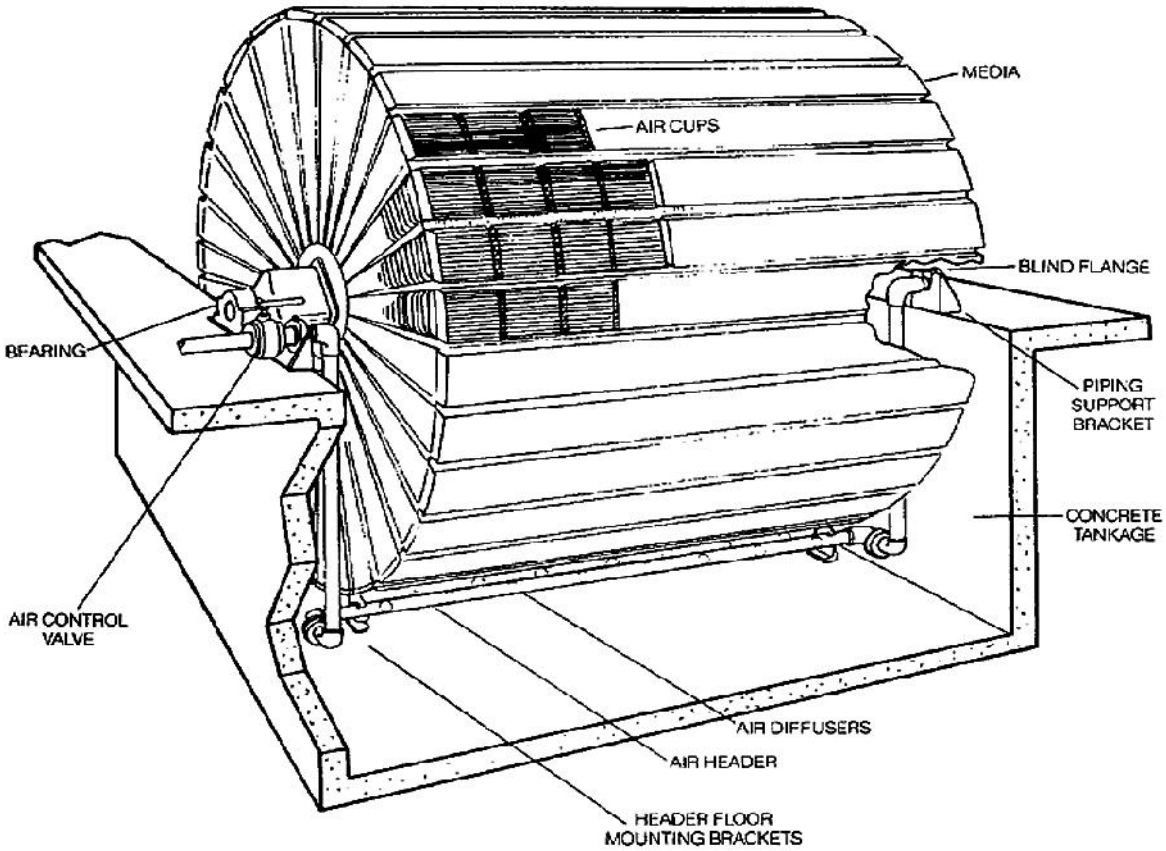

Fig.8 Design For towed rotating biological conatcors