Non-magnetic generating electricity

Shuai Yang (593820103@qq.com)
Xi'an University of Posts & Telecommunications https://orcid.org/0000-0002-6853-7475

Physical Sciences - Article

Keywords: magnetization, magnetic field, electricity generation

Posted Date: September 28th, 2021

DOI: https://doi.org/10.21203/rs.3.rs-936628/v1

Abstract

In the past scientific cognition, changes in the magnetic field produce electric field, so when there is current and voltage generation, need to have a change in magnetic flux, However, in the process of studying the nature of magnetization, we found that the microscopic formation of a magnetic field is the directional movement of positive and negative charges, under the guidance of this theory, we use other methods, realize the separation of positive and negative charges, observation of induced current generation, this can be used as another way to generate electricity.

Full Text

Experimental rationale

According to the electric field force formula of a point charge:

$$\mathrm{F} = \mathrm{k}\frac{q_1 q_2}{r^2}$$

Current formula:

$$\mathrm{I} = \frac{Q}{t}$$

Suppose the attractive force of a magnet is 50N, after the magnet attracts the iron material, We treat the iron material as close to the magnet atom, Then r is calculated according to the diameter of the iron atom.

$$50 = \mathrm{n} * 9 * 10^9 \frac{1.6 * 10^{-19} * 1.6 * 10^{-19}}{1.26 * 10^{-10} * 1.26 * 10^{-10}}$$

It can be calculated that the number of single charges required is approximately equal to n=3.4*10^9,

Assuming the current is 1A, Unit time 1s:

$$1 = \mathrm{n} * \frac{1.6 * 10^{-19}}{1}$$

The number of atoms passed during the period is approximately equal to n=1.6*10^{19}, comparison of the two, means it can attract a 5kg magnet and 1A current, the number of microscopic charges is about 10^{10} orders of magnitude, In other words, a magnetic field with a strong gravitational force is equivalent to a very weak current, The range of ordinary current and voltmeter cannot be measured directly, need an amplifying circuit in the middle, increase the current level to within the range of the ammeter.

Experimental verification

The first experiment:

Two iron blocks A and B with different magnetic properties, It is stipulated that the magnetic field strength of A is greater than that of B, Then the microscopic atomic level is shown in Figure 1-1:

A has 3 pairs of charges, B has a pair of charges, When A and B attract contact□Form a whole as shown in Figure 1-2:

A has three positive charges and will move to B, connect an ammeter in series between A and B, When the two are separated, as shown in Figure 1-3:

A and B charge distribution is not uniform and potential difference, The charge in A flows back to B and generating current, the experimental phenomenon is 0.1uA level.

The second experiment:

In the study of electromagnetic oscillation, We point out that the plates of the capacitor always get or lose electrons alternately, The experiment is shown in Figure 2, connect the core of inductor coil 1 and coil 2, the two coils are far enough apart, Coil 2 passes through an amplifying circuit of 120000, then connect with the ammeter, After charging the coil, the power is cut off instantly, Inductor coil 1 releases the magnetic field□There is a weak external current□Temporarily change the distribution of positive and negative charges in the core□The experimental phenomenon can be seen□The current indication number jumps about 3uA up and down near the reference current□Proof of induced current generation□Prove that the magnetic flux inside the iron core has changed□disconnect the iron core, No induced current generation, Eliminate the influence of the magnetic field of the inductor 1.

The third experiment:

As shown in Figure 3, Add parallel plates at both ends of the iron core, Form a capacitor, In the process of energizing the plates, The upper end of the iron core gathers positive charges, Negative charge at the bottom, By electric field force, change the distribution of positive and negative charges inside the core, In the process of charge movement, Inductor coil 2 generates induced current, Experimental phenomenon shows that the current is very weak as 0.1uA.

The fourth experiment:

On the basis of the first two experiments, we do this predictive experiment as shown in Figure 4, energize the core, It can be seen through experimental phenomena, At the moment of power-on, there is induced current in the coil 2, When the current stabilizes, no induced current, from this I guess that the moment the current is switched on, the electronic movement inside the iron core is out of sync, One end of the charge moves first, change the total internal charge of the iron core, When the current stabilizes, the charge in and out of the core is equal, no magnetic field is generated.

The fifth experiment:

In the process of radio propagation load the required signal to the oscillating circuit, the receiving end goes through a series of screenings, can complete the transmission and reception of electromagnetic signals, Here we speculate, If the magnet frequency is applied to the oscillating circuit, the receiving end is composed of iron core and coil, can realize medium and long distance radio energy transmission.

Specifically, the transmitting end is composed of a neodymium magnet, an electromagnet, and a transmitting antenna as shown in Figure 5-1:

After the electromagnet is energized, the magnetic field strength is greater than that of the neodymium magnet, alternate power supply to the electromagnet, On the branch at the top of the transmitting antenna, Will form a magnetic ring with alternating N pole and S pole, radiate outwards in the form of magnetic field waves in space, there is a section of frequency in the magnetic ring that is given by the neodymium magnet, The receiving end is composed of receiving antenna and induction coil as shown in Figure 5-2:

The receiving antenna is made of soft iron, can identify the frequency given by the neodymium magnet in the magnetic ring, absorb the energy of the corresponding magnetic ring and then be magnetized, the magnetic flux passing through the induction coil changes and induced current, found during the experiment, At about 0.5 meters, there is a cliff drop, less than 0.5 meters, the induced current obviously, more than 0.5 meters, the induced current decreases rapidly.

Experimental results

Experiment 1 Principle of magnetic field superposition, make the positive charge move from A to B, experiment 2 to experiment 4 utilize the characteristics of electric field, drive the directional movement of positive and negative charges, all experiments have in common there is induced current generation, this can be used as another way to generate electricity experiment 5 can be used for wireless transmission of electric energy in medium and long distance

In the process of research we found that electric and magnetic fields are relative to electric charges, both show as positive and negative charge separation. The amount of charge determines the size of the electric field, under the action of electric field force, can directly drive charge to move; The size of the magnetic field determines how much charge can be caused to move, Under the force of a magnetic field, the charge is unevenly distributed, but does not move.

Figures

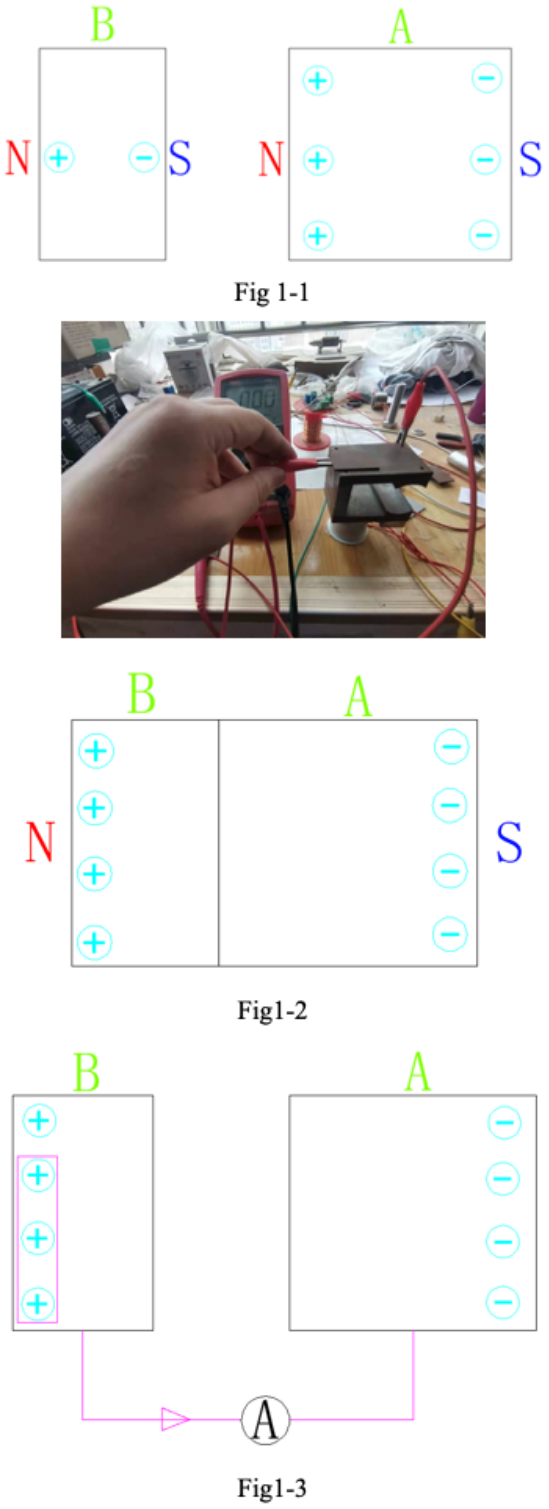

Figure 1

Caption not available with this version.

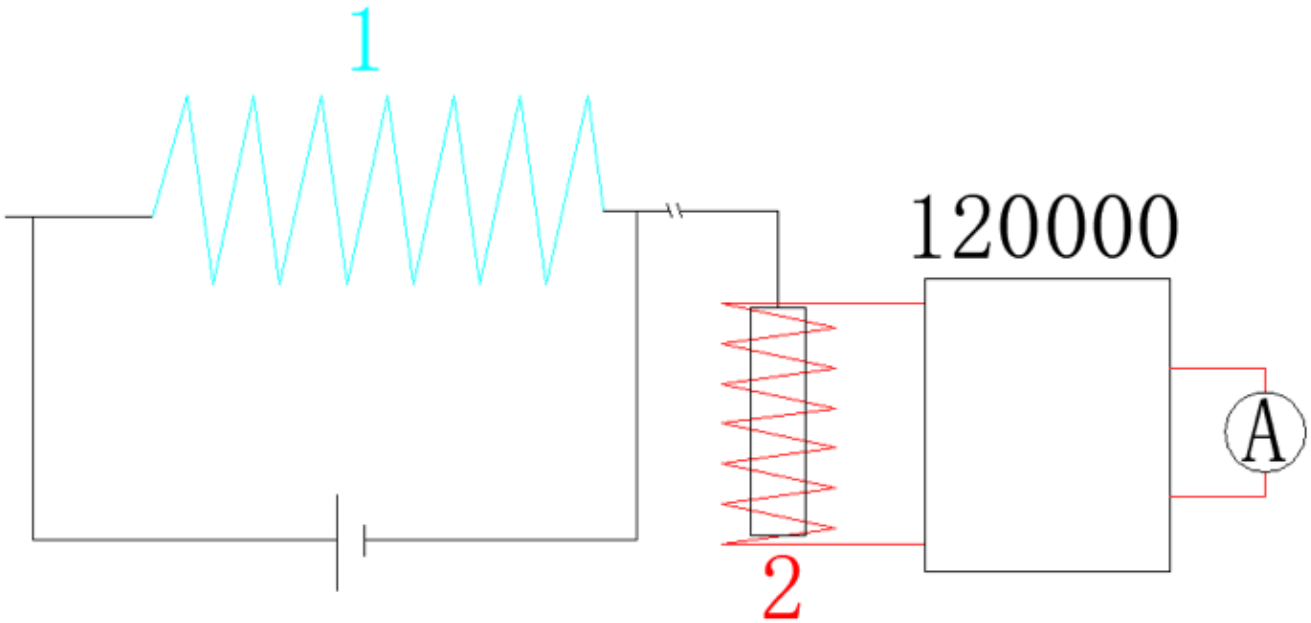

Fig 2

Figure 2

Caption not available with this version.

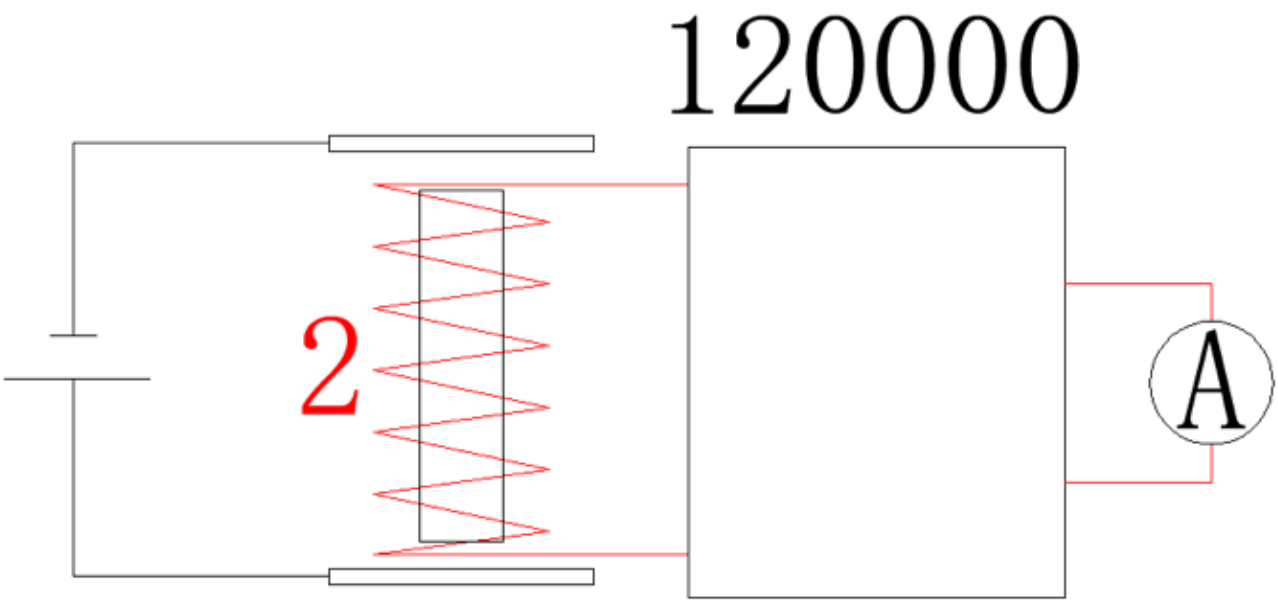

Fig 3

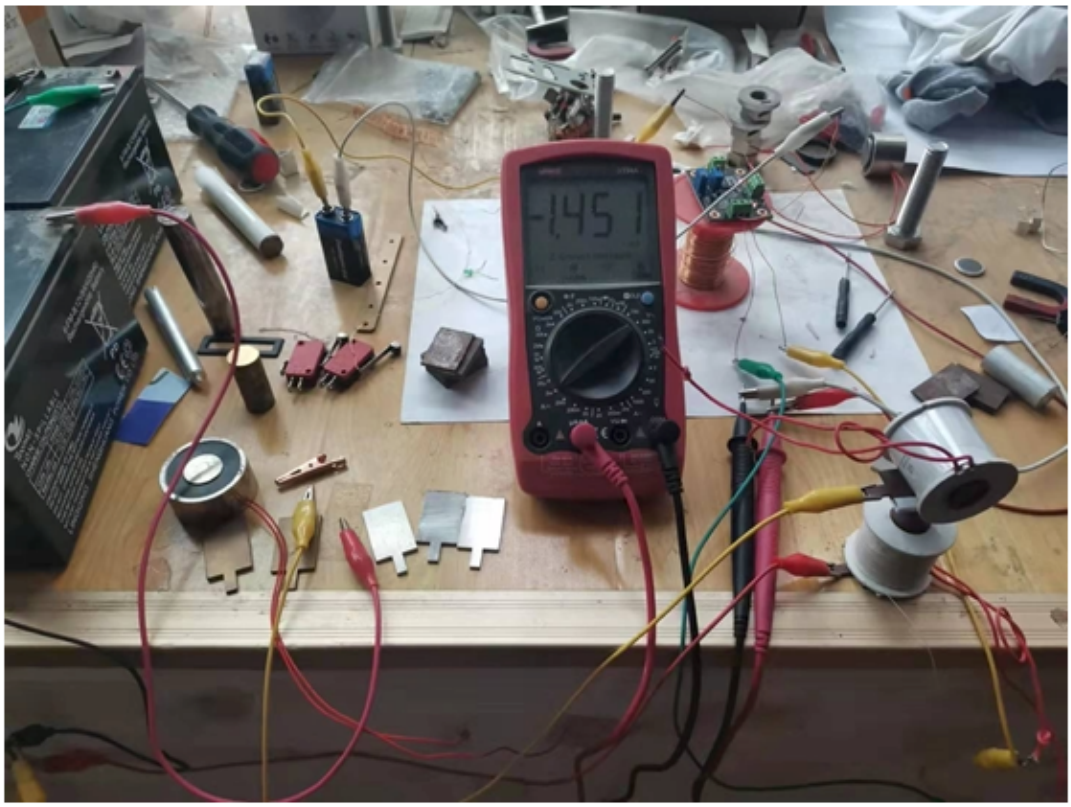

Figure 3

Caption not available with this version.

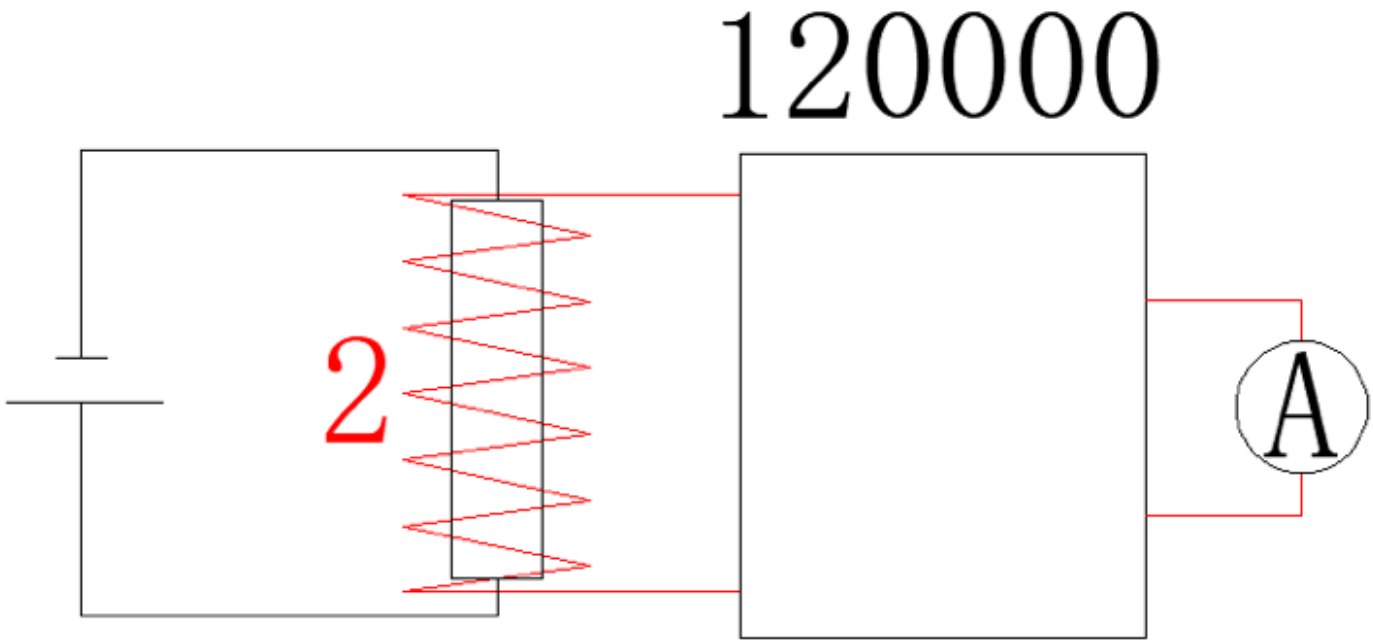

Fig 4

Figure 4

Caption not available with this version.

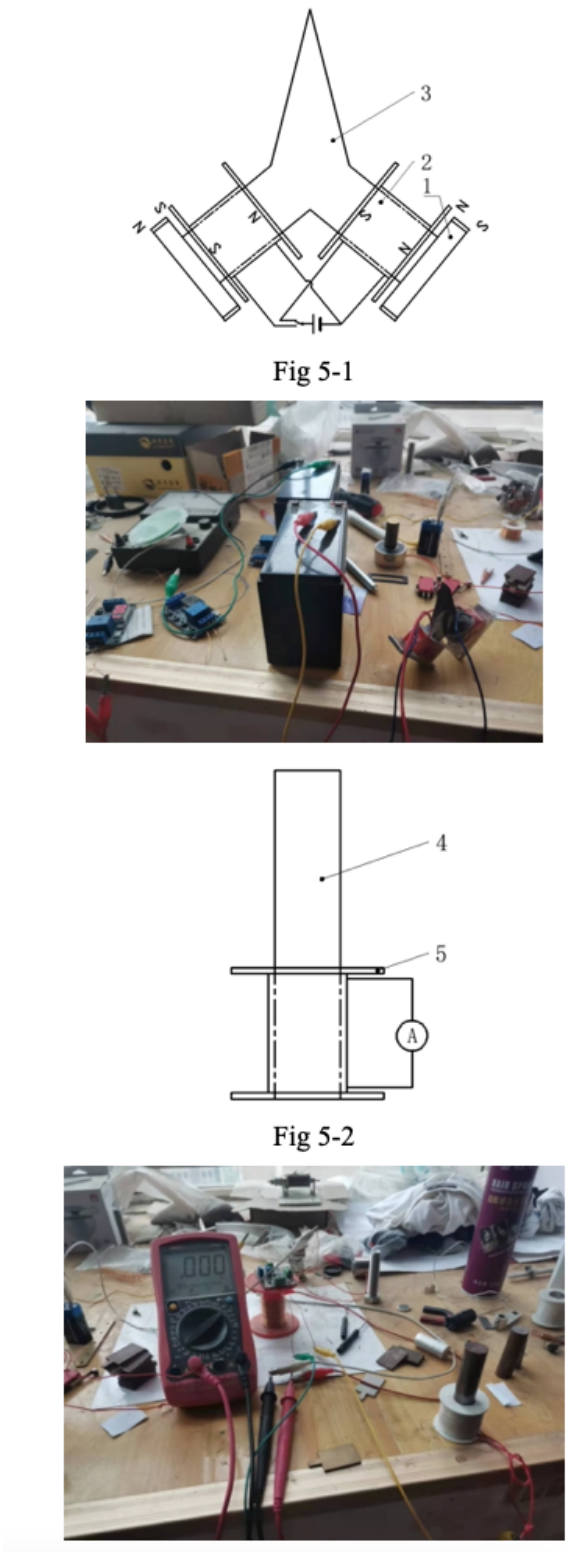

Figure 5

Caption not available with this version.

Supplementary Files

This is a list of supplementary files associated with this preprint. Click to download.

- XXXXXX1.mp4
- XXXXXX2.mp4
- XXXXXX3.mp4
- XXXXXX4.mp4
- XXXXXX5.mp4